DHI-VTO4103F/DHI-VTO4103FB

2-wire Hybrid Modular Apartment Door Station

- Anodized aluminum front panel.
- CMOS low illumination 2MP HD colorful 160° fisheye camera.
- Supports 2-wire communication.
- Modules make the device with great expansibility.
- Supports surface and flush mount.
- IK07 and IP65 rated.

Technical Specification

System

Main Processor	Embedded Processor
Operating System	Embedded Linux operating system

Basic

Camera	1/2.5" 2 MP CMOS low illumination HD color fisheye camera
Field of View	H: 168.6°; V: 87.1°; D: 176.7°
WDR	120 dB
Noise Reduction	3D NR
Video Resolution	P: 960 (H) × 576 (V) N: 960 (H) × 480 (V)
Video Frame Rate	P: 25 fps N: 30 fps
Light Compensation	Auto IR
Day/Night	Auto(ICR)/Color/B/W
Audio Input	1 channel
Audio Output	Built-in speaker
Audio Mode	Two-way audio (half–duplex)
Audio Enhancement	Echo suppression/digital noise reduction

Function

Communication Mode	Analog 2-wire
Unlock Mode	IC card, ID card, password, fingerprint, and remote unlock (A sub-module must be connected to the main module for the first 4 methods)
Leave Videos	Yes (SD card inserted in VTH is needed)

Performance

Casing Material	Aluminum alloy

Port

RS-485	1
Alarm Output	1 channel
Power Output	1 channel, 12 V, 1 A
Exit Button	1 channel
Door Status Detection	1 channel
Lock Control	1 channel

Alarm

Tamper Alarm	Yes

General

Appearance Color	Silver, black
Power Supply	2-wire controller
Installation	Flush mount; Surface mount
Certifications	CE
Accessory	Surface mount box (optional), flush mount box (optional), panel (optional)
Product Dimensions	100 mm × 100 mm × 47.4 mm (3.94" × 3.94" × 1.87")
Protection	IK07; IP65
Operating Temperature	–40 °C to +60 °C (–40 °F to +140°F)
Operating Humidity	10%–90%
Operating Environment	Outdoor
Operating Altitude	0 m–3,000 m (0 ft–9,842.52 ft)
Power Consumption	≤4 W (standby), ≤12 W (working)
Gross Weight	444.5 g (0.98 lb)

Ordering Information

Type	Model	Description
Modules	DHI-VTO4103F	Camera module
	DHI-VTO4103FB	Camera module(Black)
	DHI-VTO4103F-MB1	One-button module
	DHI-VTO4103FB-MB1	One-button module(Black)
	DHI-VTO4103F-MB2	Two-button module
	DHI-VTO4103FB-MB2	Two-button module(Black)
	DHI-VTO4103F-MB5	Five-button module
	DHI-VTO4103FB-MB5	Five-button module(Black)
	DHI-VTO4103F-ML	Indicator module
	DHI-VTO4103FB-ML	Indicator module(Black)
	DHI-VTO4103F-MK	Keyboard module
	DHI-VTO4103FB-MK	Keyboard module(Black)
	DHI-VTO4103F-MF	Fingerprint module
	DHI-VTO4103FB-MF	Fingerprint module(Black)
	DHI-VTO4103F-MR	Card swiping module(IC)
	DHI-VTO4103FB-MR	Card swiping module(IC)(Black)
	DHI-VTO4103F-MR1	Card swiping module(ID)
	DHI-VTO4103FB-MR1	Card swiping module(ID)(Black)
	DHI-VTO4103F-MI	Info module
	DHI-VTO4103FB-MI	Info module(Black)
	DHI-VTO4103F-MN	Blank module
	DHI-VTO4103FB-MN	Blank module(Black)
Accessories	VTM125	Front panel for 2 modules
	VTM126	Front panel for 3 modules
	VTM25P2	Front panel for 2 modules(Black)
	VTM24P3	Front panel for 3 modules(Black)
	VTM77	Front panel for 1 module
	VTM78	Front panel for 1 module(Black)
	VTM52R2	Vertical two modules, surface mounted rain cover
	VTM53R3	Vertical three module, surface mounted rain cover
	VTM54R4	Vertical two*2 modules in parallel, surface mounted rain cover
	VTM56R6	Vertical two*3 modules in parallel, surface mounted rain cover
	VTM51R2	Vertical two modules with vertical rod, the cable goes out, It has the function of receiving the cable
	VTM61R2	Vertical two modules with vertical extended rod, the cable goes out, It has the function of receiving the cable
	VTM26R2	Vertical two modules, surface mounted rain cover(Black)
	VTM27R3	Vertical three module, surface mounted rain cover(Black)
	VTM28R4	Vertical two*2 modules in parallel, surface mounted rain cover(Black)
	VTM29R6	Vertical two*3 modules in parallel, surface mounted rain cover(Black)
	VTM30R2	Vertical two modules with vertical rod, the cable goes out, It has the function of receiving the cable(Black)
	VTM75	Vertical one module, surface mounted rain cover
	VTM76	Vertical one module, surface mounted rain cover(Black)
	VTM127	Mounting box for 2 modules
	VTM128	Mounting box for 3 modules
	VTM79	Mounting box for 1 module

Installation

1-module, Surface	1-module, Flush
Rain Cover: VTM75, VTM76(Black) Panel: VTM77, VTM78(Black)	Box: VTM79 Panel: VTM77, VTM78(Black)
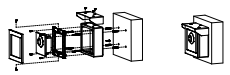	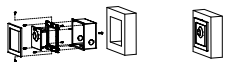
2-module, Surface	2-module, Flush
Rain Cover: VTM52R2, VTM26R2(Black) Panel: VTM125, VTM25P2(Black)	Box: VTM127 Panel: VTM125, VTM25P2(Black)
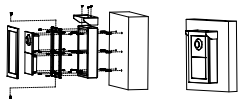	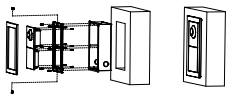
2-module, Vertical rod	3-module, Surface
Vertical rod: VTM51R2. VTM61R2(Extended), VTM30R2(Black) Panel: VTM125, VTM25P2(Black)	Rain Cover: VTM53R3, VTM27R3(Black) Panel: VTM126, VTM24P3(Black)
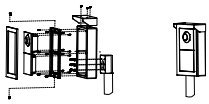	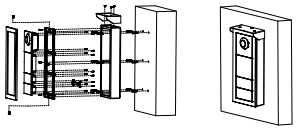
3-module, Flush	2 * 2-module, Surface
Box: VTM128 Panel: VTM126, VTM24P3(Black)	Rain Cover: VTM54R4, VTM28R4(Black) Panel: VTM125*2, VTM25P2(Black)*2
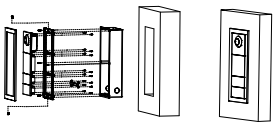	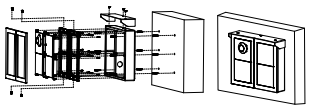
2 * 3-module, Surface	
Rain Cover: VTM56R6, VTM29R6(Black) Panel: VTM126*2, VTM24P3(Black)*2	
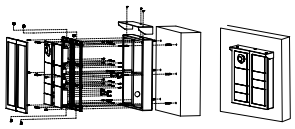	

Dimensions (mm[inch])

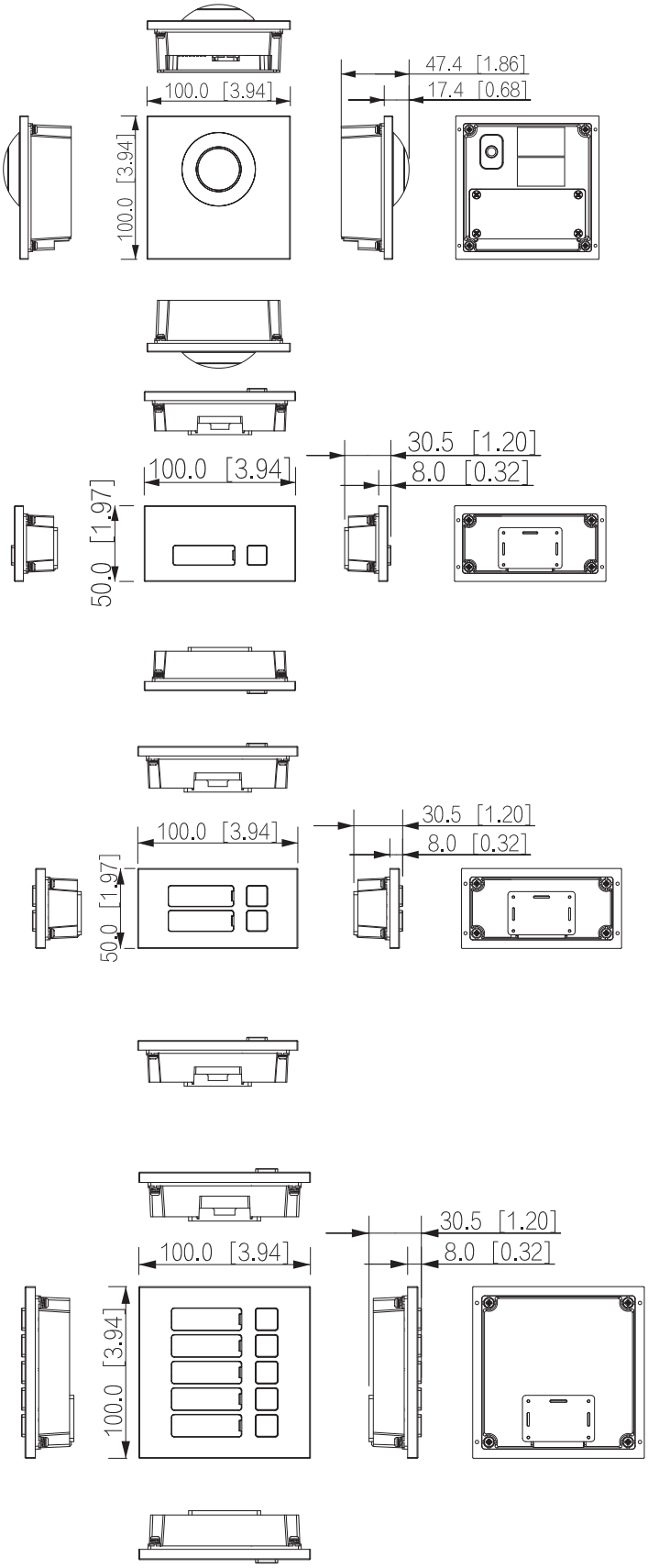

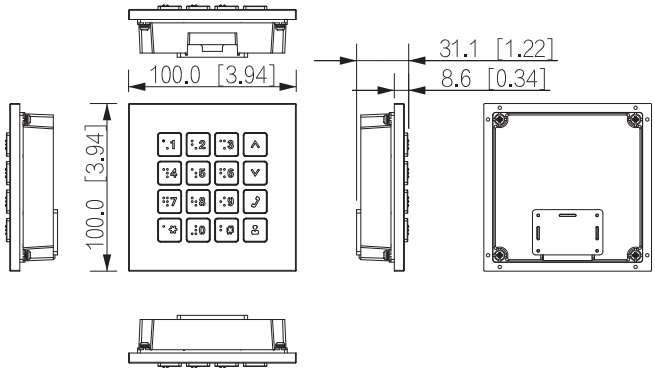

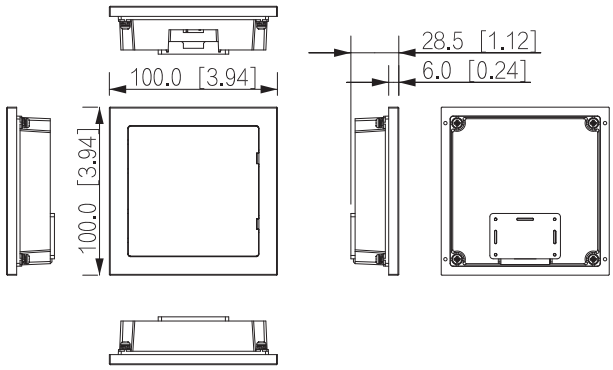

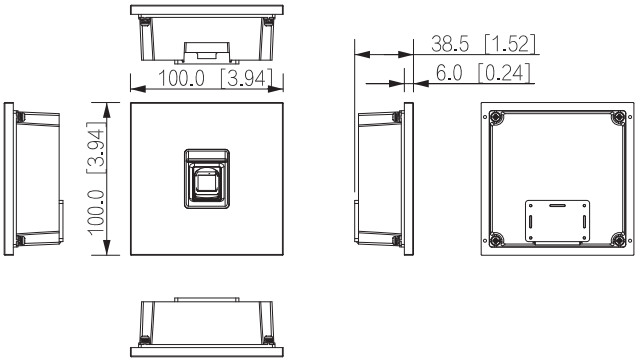

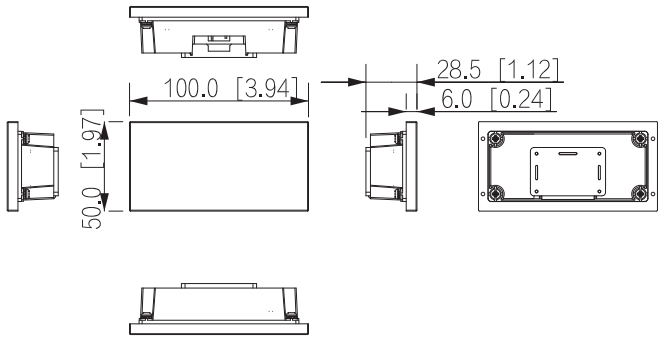

Application

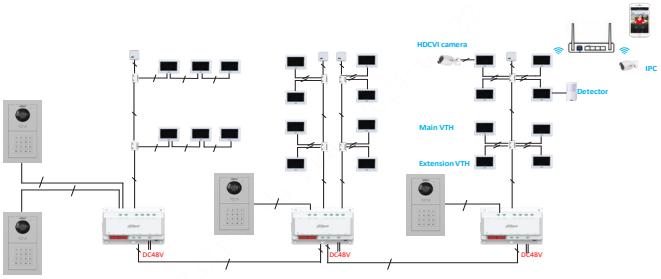

© 2025 Dahua. All rights reserved. Design and specifications are subject to change without notice.
The images, specifications and information mentioned in the document are only for reference, and might differ from the actual product.