# DHI-VTO420XFB-X Series

## Module

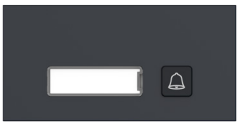

| Technical Specification | |
|---|---|
| Model | DHI-VTO4202FB-MB1 |
| System | |
| Main Processor | Embedded Processor |
| Button Type | Mechanical |
| Performance | |
| Casing Material | Aluminum alloy |
| Port | |
| Power Output | 5 VDC (provides power for other modules) |
| General | |
| Appearance Color | Black |
| Power Supply | 5 VDC (provided by other modules) |
| Installation | Flush Mount;Surface Mount |
| Product Dimensions | 100 mm × 50.0 mm × 30.50 mm (3.94" × 1.97" × 1.20") |
| Protection | IK07;IP65(silicone sealant is needed for installation) |
| Operating Temperature | –30 °C to +60 °C (–22 °F to +140 °F) |
| Operating Humidity | 10%–90% (RH) |
| Power Consumption | ≤0.5 W |
| Gross Weight | 0.18 kg (0.40 lb) |

| Technical Specification | |
|---|---|
| Model | DHI-VTO4202FB-MB2 |
| System | |
| Main Processor | Embedded Processor |
| Button Type | Mechanical |
| Performance | |
| Casing Material | Aluminum alloy |
| Port | |
| Power Output | 5 VDC (provides power for other modules) |
| General | |
| Appearance Color | Black |
| Power Supply | 5 VDC (provided by other modules) |
| Installation | Flush Mount;Surface Mount |
| Product Dimensions | 100 mm × 50.0 mm × 30.50 mm (3.94" × 1.97" × 1.2") |
| Protection | IK07;IP65(silicone sealant is needed for installation) |
| Operating Temperature | –30 °C to +60 °C (–22 °F to +140 °F) |
| Operating Humidity | 10%–90% (RH) |
| Power Consumption | ≤0.5 W |
| Gross Weight | 0.17 kg (0.37 lb) |

| Technical Specification | |
|---|---|
| Model | DHI-VTO4202FB-MB5 |
| System | |
| Main Processor | Embedded Processor |
| Button Type | Mechanical |
| Performance | |
| Casing Material | Aluminum alloy |
| Port | |
| Power Output | 5 VDC (provides power for other modules) |
| General | |
| Appearance Color | Black |
| Power Supply | 5 VDC (provided by other modules) |
| Installation | Flush Mount;Surface Mount |
| Product Dimensions | 100 mm × 100 mm × 30.50 mm (3.94" × 3.94" × 1.2") |
| Protection | IK07;IP65(silicone sealant is needed for installation) |
| Operating Temperature | –30 °C to +60 °C (–22 °F to +140 °F) |
| Operating Humidity | 10%–90% (RH) |
| Power Consumption | ≤0.5 W |
| Gross Weight | 0.31 kg (0.68 lb) |

| Technical Specification | |
|---|---|
| Model | DHI-VTO4202FB-MDB2 |
| System | |
| Button Type | Mechanical |
| Number of Buttons | 2 |
| Performance | |
| Casing Material | Aluminum alloy |
| Port | |
| Power Output | 5 VDC (Provide power for other modules) |
| General | |
| Appearance Color | Black |
| Power Supply | 5 VDC (Provided with power by other modules) |
| Certifications | CE EMC; CE LVD |
| Product Dimensions | 100.0 mm × 50.0 mm × 26 mm (3.94" × 1.97" × 1.02") |
| Protection | IK07; IP65 (Silicone sealant is needed for installation) |
| Operating Temperature | –30 °C to +60 °C (–22 °F to +140 °F) |
| Operating Humidity | 10%–90% (RH), non-condensing |
| Operating Environment | Outdoor |
| Operating Altitude | 0 m–3,000 m (0 ft–9,842.52 ft) |
| Power Consumption | ≤0.2 W (standby), ≤0.6 W (working) |
| Gross Weight | 0.23 kg (0.51 lb) |
| Storage Temperature | 0 °C to +40 °C (+32 °F to +104 °F) |
| Storage Humidity | 30%–75% (RH) |

| Technical Specification | |
|---|---|
| Model | DHI-VTO4202FB-MDB4 |
| System | |
| Button Type | Mechanical |
| Number of Buttons | 4 |
| Performance | |
| Casing Material | Aluminum alloy |
| Port | |
| Power Output | 5 VDC (Provide power for other modules) |
| General | |
| Appearance Color | Black |
| Power Supply | 5 VDC (Provided with power by other modules) |
| Certifications | CE EMC; CE LVD |
| Product Dimensions | 100.0 mm × 50.0 mm × 26 mm (3.94" × 1.97" × 1.02") |
| Protection | IK07; IP65 (Silicone sealant is needed for installation) |
| Operating Temperature | –30 °C to +60 °C (–22 °F to +140 °F) |
| Operating Humidity | 10%–90% (RH), non-condensing |
| Operating Environment | Outdoor |
| Operating Altitude | 0 m–3,000 m (0 ft–9,842.52 ft) |
| Power Consumption | ≤0.2 W (standby), ≤0.6 W (working) |
| Gross Weight | 0.24 kg (0.53 lb) |
| Storage Temperature | 0 °C to +40 °C (+32 °F to +104 °F) |
| Storage Humidity | 30%–75% (RH) |

| Technical Specification | |
|---|---|
| Model | DHI-VTO4202FB-MDB10 |
| System | |
| Button Type | Mechanical |
| Number of Buttons | 10 |
| Performance | |
| Casing Material | Aluminum alloy |
| Port | |
| Power Output | 5 VDC (Provide power for other modules) |
| General | |
| Appearance Color | Black |
| Power Supply | 5 VDC (Provided with power by other modules) |
| Certifications | CE EMC; CE LVD |
| Product Dimensions | 100.0 mm × 100.0 mm × 26 mm (3.94" × 3.94" × 1.02") |
| Protection | IK07; IP65 (Silicone sealant is needed for installation) |
| Operating Temperature | –30 °C to +60 °C (–22 °F to +140 °F) |
| Operating Humidity | 10%–90% (RH), non-condensing |
| Operating Environment | Outdoor |
| Operating Altitude | 0 m–3,000 m (0 ft–9,842.52 ft) |
| Power Consumption | ≤0.2 W (standby), ≤0.6 W (working) |
| Gross Weight | 0.33 kg (0.73 lb) |
| Storage Temperature | 0 °C to +40 °C (+32 °F to +104 °F) |
| Storage Humidity | 30%–75% (RH) |

| Technical Specification | |
|---|---|
| Model | DHI-VTO4202FB-MF |
| System | |
| Main Processor | Embedded Processor |
| Performance | |
| Casing Material | Aluminum alloy |
| Port | |
| Power Output | 5 VDC (provides power for other modules) |
| General | |
| Appearance Color | Black |
| Power Supply | 5 VDC (provided by other modules) |
| Installation | Flush Mount;Surface Mount |
| Product Dimensions | 100 mm × 100 mm × 38.50 mm (3.94" × 3.94" × 1.52") |
| Protection | IK07;IP65(silicone sealant is needed for installation) |
| Operating Temperature | –30 °C to +60 °C (–22 °F to +140 °F) |
| Operating Humidity | 10%–90% (RH) |
| Power Consumption | ≤0.5 W |
| Gross Weight | 0.33 kg (0.73 lb) |

| Technical Specification | |
|---|---|
| Model | DHI-VTO4202FB-MI |
| System | |
| Casing Material | Aluminum |
| General | |
| Appearance Color | Black |
| Power Supply | 5 VDC (Provided with power by other modules) |
| Certifications | CE |
| Product Dimensions | 100.0 mm × 100.0 mm × 28.5 mm (3.94" × 3.94" × 1.12") |
| Protection | IK07; IP65 (silicone sealant is needed for installation) |
| Operating Temperature | –30°C to +60°C (–22°F to +140°F) |
| Operating Humidity | 10%–90% (RH), non-condensing |
| Operating Environment | Outdoor |
| Operating Altitude | 0 m–3000 m (0 ft–9842.52 ft) |
| Power Consumption | ≤0.5 W |
| Gross Weight | 0.28 kg (0.62 lb) |
| Storage Temperature | 0 °C to +40 °C (+32 °F to +104 °F) |
| Storage Humidity | 30%–75% (RH), non-condensing |

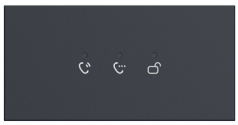

| Technical Specification | |
|---|---|
| Model | DHI-VTO4202FB-MK |
| System | |
| Main Processor | Embedded Processor |
| Button Type | Mechanical |
| Performance | |
| Casing Material | Aluminum alloy |
| Port | |
| Power Output | 5 VDC (provides power for other modules) |
| General | |
| Appearance Color | Black |
| Power Supply | 5 VDC (provided by other modules) |
| Installation | Flush Mount;Surface Mount |
| Product Dimensions | 100 mm × 100 mm × 31 mm (3.94" × 3.94" × 1.22") |
| Protection | IK07;IP65(silicone sealant is needed for installation) |
| Operating Temperature | –30 °C to +60 °C (–22 °F to +140 °F) |
| Operating Humidity | 10%–90% (RH) |
| Power Consumption | ≤0.5 W |
| Gross Weight | 0.32 kg (0.71 lb) |

| Technical Specification | |
|---|---|
| Model | DHI-VTO4202FB-ML |
| System | |
| Main Processor | Embedded Processor |
| Performance | |
| Casing Material | Aluminum alloy |
| Port | |
| Power Output | 5 VDC (provides power for other modules) |
| General | |
| Appearance Color | Black |
| Power Supply | 5 VDC (provided by other modules) |
| Installation | Flush Mount;Surface Mount |
| Product Dimensions | 100 mm × 50.0 mm × 28.50 mm (3.94" × 1.97" × 1.12") |
| Protection | IK07;IP65(silicone sealant is needed for installation) |
| Operating Temperature | –30 °C to +60 °C (–22 °F to +140 °F) |
| Operating Humidity | 10%–90% (RH) |
| Power Consumption | ≤2 W |
| Gross Weight | 0.19 kg (0.42 lb) |

| Technical Specification | |
|---|---|
| Model | DHI-VTO4202FB-MN |
| **Performance** | |
| Casing Material | Aluminum alloy |
| **General** | |
| Appearance Color | Black |
| Installation | Flush Mount;Surface Mount |
| Product Dimensions | 100 mm × 50.0 mm × 28.50 mm (3.94" × 1.97" × 1.12") |
| Protection | IK07;IP65(silicone sealant is needed for installation) |
| Operating Temperature | –30 °C to +60 °C (–22 °F to +140 °F) |
| Operating Humidity | 10%–90% (RH) |
| Gross Weight | 0.17 kg (0.37 lb) |
| Power Consumption | ≤0.5 W |
| Gross Weight | 0.32 kg (0.71 lb) |

| Technical Specification | |
|---|---|
| Model | DHI-VTO4202FB-MR |
| **System** | |
| Main Processor | Embedded Processor |
| **Function** | |
| Card Type | IC card |
| **RFID** | |
| Modulation Type | AM |
| Frequency Range | 13.56 MHz |
| Max. Transmission Power | 42dBuA/m @10m |
| **Performance** | |
| Card Reading Distance | 1 cm–3 cm (0.39"–1.18") |
| Casing Material | Aluminum alloy |
| **Port** | |
| Power Output | 5 VDC (provides power for other modules) |
| **General** | |
| Appearance Color | Black |
| Power Supply | 5 VDC (provided by other modules) |
| Installation | Flush Mount;Surface Mount |
| Product Dimensions | 100 mm × 50.0 mm × 28.50 mm (3.94" × 1.97" × 1.12") |
| Protection | IK07;IP65(silicone sealant is needed for installation) |
| Operating Temperature | –30 °C to +60 °C (–22 °F to +140 °F) |
| Operating Humidity | 10%–90% (RH) |
| Power Consumption | ≤2 W |
| Gross Weight | 0.16 kg (0.35 lb) |

| Technical Specification | |
|---|---|
| Model | DHI-VTO4202FB-MR1 |
| System | |
| Main Processor | Embedded Processor |
| Function | |
| Card Type | ID card |
| RFID | |
| Modulation Type | AM |
| Frequency Range | 125kHz |
| Max. Transmission Power | 66dBuA/m @10m |
| Performance | |
| Card Reading Distance | 1 cm–3 cm (0.39"–1.18") |
| Casing Material | Aluminum alloy |
| Port | |
| Power Output | 5 VDC (provides power for other modules) |
| General | |
| Appearance Color | Black |
| Power Supply | 5 VDC (provided by other modules) |
| Installation | Flush Mount;Surface Mount |
| Product Dimensions | 100 mm × 50.0 mm × 28.50 mm (3.94" × 1.97" × 1.12") |
| Protection | IK07;IP65(silicone sealant is needed for installation) |
| Operating Temperature | –30 °C to +60 °C (–22 °F to +140 °F) |
| Operating Humidity | 10%–90% (RH) |
| Power Consumption | ≤2 W |
| Gross Weight | 0.16 kg (0.35 lb) |

| Technical Specification | |
|---|---|
| Model | DHI-VTO4202FB-MS |
| System | |
| Main Processor | Embedded Processor |
| Performance | |
| Casing Material | Aluminum alloy |
| Port | |
| Power Output | 5 VDC (provides power for other modules) |
| General | |
| Appearance Color | Black |
| Power Supply | 5 VDC (provided by other modules) |
| Installation | Flush Mount;Surface Mount |
| Product Dimensions | 100 mm × 100 mm × 28.50 mm (3.94" × 3.94" × 1.12") |
| Protection | IK07;IP65(silicone sealant is needed for installation) |
| Operating Temperature | –30 °C to +60 °C (–22 °F to +140 °F) |
| Operating Humidity | 10%–90% (RH) |
| Power Consumption | ≤2 W |
| Gross Weight | 0.34 kg (0.75 lb) |

| Technical Specification | |
|---|---|
| Model | DHI-VTO4202FB-MV |
| Feture | It is used to install the Vigik module. |
| **Performance** | |
| Casing Material | Aluminum alloy |
| **General** | |
| Appearance Color | Black |
| Product Dimensions | 100.0 mm × 50.0 mm × 6 mm (3.94" × 1.97" × 0.24") |
| Protection | IK07 |
| Operating Temperature | –30 °C to +60 °C (–22 °F to +140 °F) |
| Operating Humidity | 10%–90% (RH, non-condensing) |
| Operating Environment | Outdoor |
| Operating Altitude | 0 m–3,000 m (0 ft–9,842.52 ft) |
| Gross Weight | 0.28 kg (0.62 lb) |
| Storage Temperature | 0 °C to +40 °C (+32 °F to +104 °F) |
| Storage Humidity | 30%–75% (RH) |

| Technical Specification | |
|---|---|
| Model | DHI-VTO4202FB-MS1 |
| **System** | |
| Main Processor | Embedded Processor |
| Button Type | Mechanical |
| Number of Buttons | 4 |
| **Basic** | |
| Screen Type | Non-touchscreen |
| Display Screen | 3-inch display screen |
| Screen Resolution | 160 (H) × 96 (V) |
| **Function** | |
| Communication Mode | Full digital |
| **Port** | |
| Power Output | 5 VDC/250 mA |
| **General** | |
| Appearance Color | Black |
| Power Supply | 5 VDC |
| Certifications | CE |
| Product Dimensions | 100.0 mm × 100.0 mm × 29.95 mm (3.94" × 3.94" × 1.18") |
| Protection | IK07: For designated area<br>IP65: Applying glue to the interface area that requires protection |
| Operating Temperature | -20 °C to +60 °C (-4 °F to +140 °F) |
| Operating Humidity | 10%–90% (RH), non-condensing |
| Operating Environment | Outdoor |
| Power Consumption | 1.25 W |
| Gross Weight | 0.35 kg (0.77 lb) |
| Storage Temperature | 0 °C to +40 °C (32 °F to +104 °F) |

## Installation

| | | |
|---|---|---|
| One module, Surface | One module, Flush | One module, Flush |
| Rain Cover: VTM75, VTM76(Black)<br>Panel: VTM77, VTM78(Black) | Box: VTM79<br>Panel: VTM77, VTM78(Black) | Box: VTM156<br>Panel: VTM77, VTM78(Black) |
| | | |
| Two modules, Surface | Two modules, Flush | Two modules, Flush |
| Rain Cover: VTM52R2, VTM26R2(Black)<br>Panel: VTM125, VTM25P2(Black) | Box: VTM127<br>Panel: VTM125, VTM25P2(Black) | Box: VTM157<br>Panel: VTM125, VTM25P2(Black) |
| 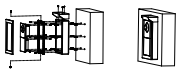 | 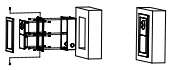 | 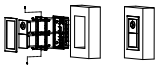 |
| Two modules, Vertical rod | Three modules, Surface | Three modules, Flush |
| Vertical rod: VTM51R2.<br>VTM61R2(Extended), VTM30R2(Black)<br>Panel: VTM125, VTM25P2(Black) | Rain Cover: VTM53R3, VTM27R3(Black)<br>Panel: VTM126, VTM24P3(Black) | Box: VTM158<br>Panel: VTM126, VTM24P3(Black) |
| 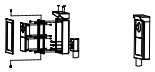 | 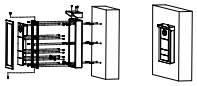 | 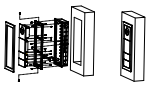 |
| Three modules, Flush | Two modules*2, Surface | Two modules*2, Flush |
| Box: VTM128<br>Panel: VTM126, VTM24P3(Black) | Rain Cover: VTM54R4, VTM28R4(Black)<br>Panel: VTM125*2, VTM25P2(Black)*2 | Box: VTM157*2<br>Panel: VTM125*2, VTM25P2(Black)*2 |
| 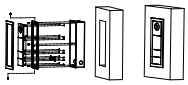 | 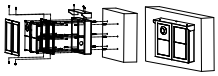 | 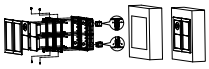 |
| Three modules*2, Surface | | Three modules*2, Flush |
| Rain Cover: VTM56R6, VTM29R6(Black)<br>Panel: VTM126*2, VTM24P3(Black)*2 | | Box: VTM158*2<br>Panel: VTM126*2, VTM24P3(Black)*2 |
| 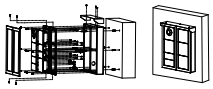 | | 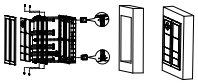 |

## Dimensions (mm[inch])

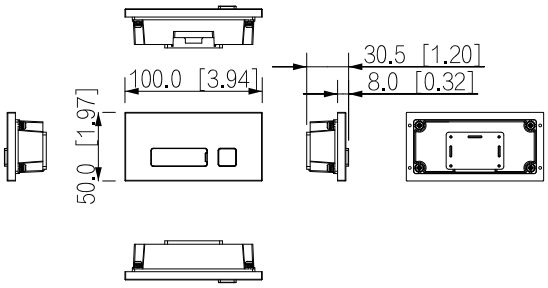


DHI-VTO4202FB-MB1

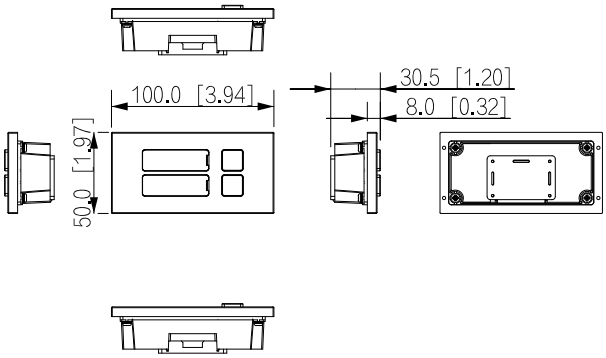


DHI-VTO4202FB-MB2

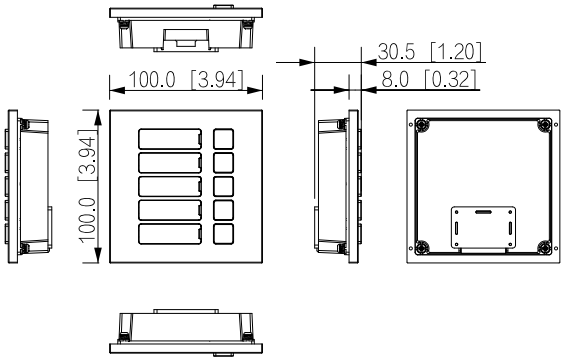


DHI-VTO4202FB-MB5

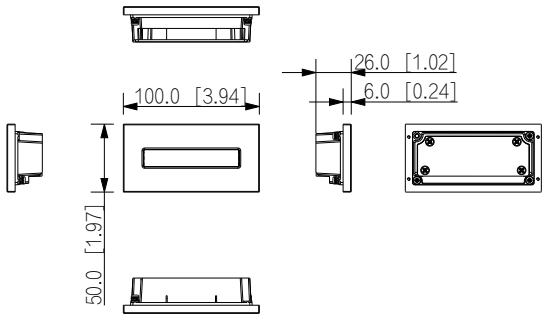


DHI-VTO4202FB-MDB2

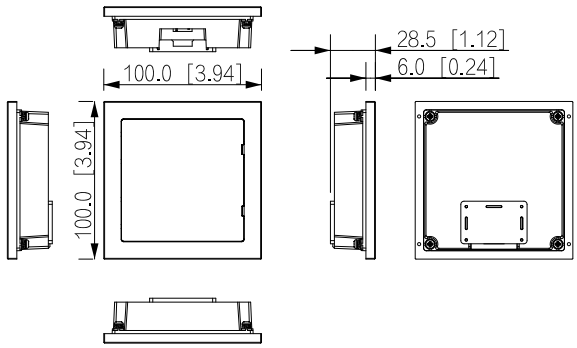


DHI-VTO4202FB-MI

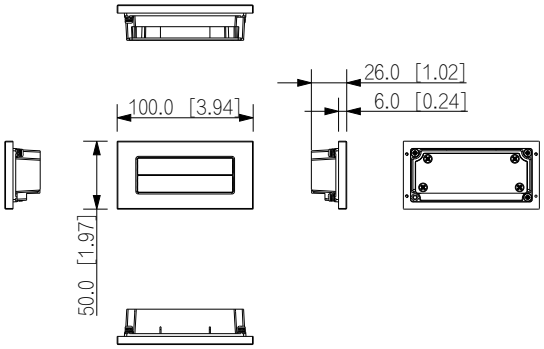


DHI-VTO4202FB-MDB4

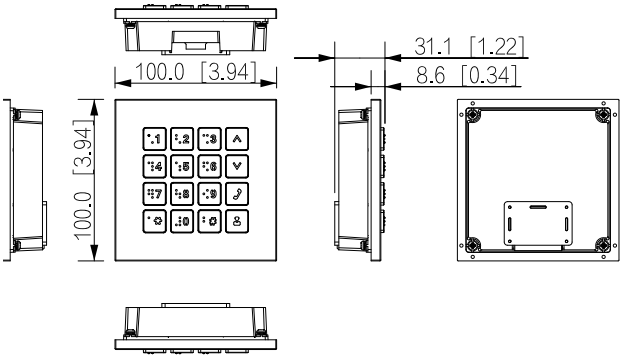


DHI-VTO4202FB-MK

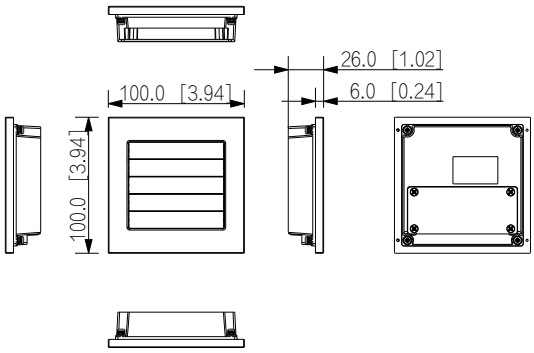


DHI-VTO4202FB-MDB10

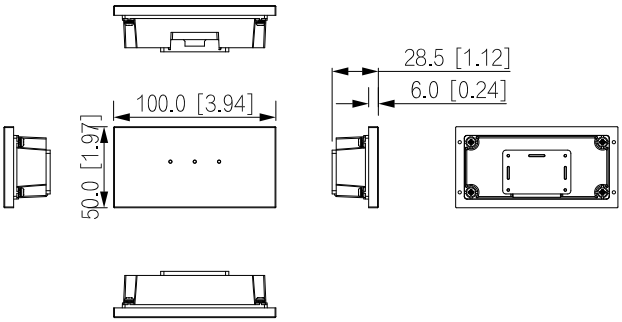


DHI-VTO4202FB-ML

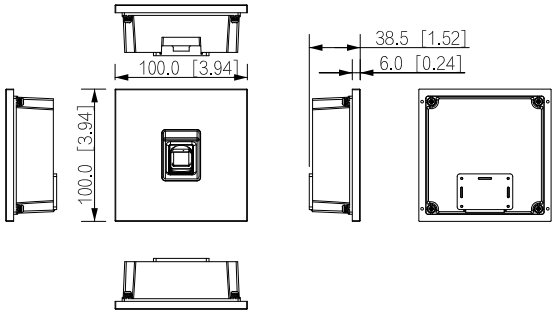


DHI-VTO4202FB-MF

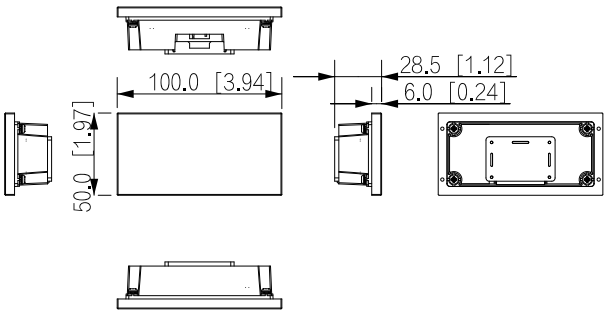


DHI-VTO4202FB-MN

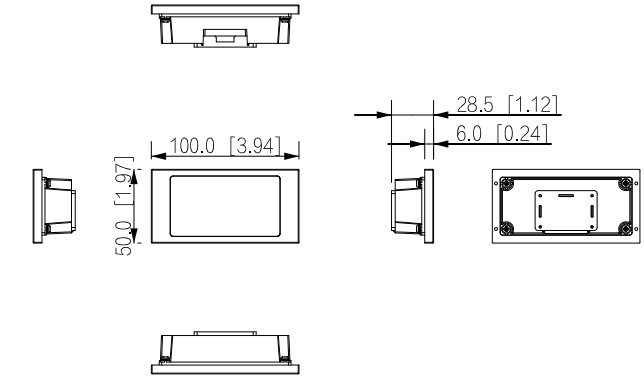


DHI-VTO4202FB-MR.DHI-VTO4202FB-MR1

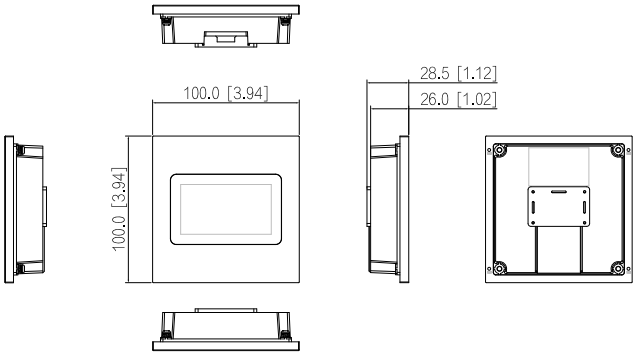


DHI-VTO4202FB-MS

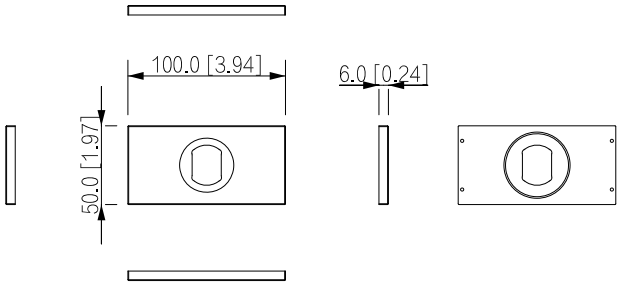


DHI-VTO4202FB-MV

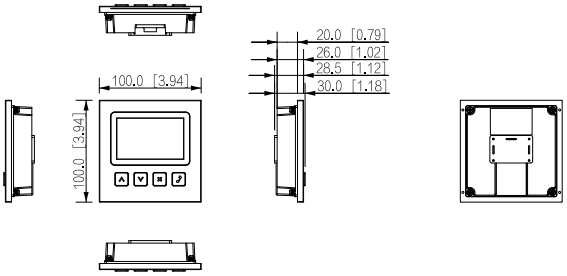


DHI-VTO4202FB-MS1


© 2026 Dahua. All rights reserved. Design and specifications are subject to change without notice.
The images, specifications and information mentioned in the document are only for reference, and might differ from the actual product.