Ethernet Switch (48-port Managed Switch)

Quick Start Guide

ZHEJIANG DAHUA VISION TECHNOLOGY CO., LTD. V1.0.0

Foreword

General

This manual introduces the installation, functions and operations of the 48-port Managed Switch (hereinafter referred to as "the device"). Read carefully before using the device, and keep the manual safe for future reference.

Safety Instructions

The following signal words might appear in the manual.

Signal Words	Meaning
DANGER	Indicates a high potential hazard which, if not avoided, will result in death or serious injury.
WARNING	Indicates a medium or low potential hazard which, if not avoided, could result in slight or moderate injury.
CAUTION	Indicates a potential risk which, if not avoided, could result in property damage, data loss, lower performance, or unpredictable result.
TIPS	Provides methods to help you solve a problem or save you time.
NOTE	Provides additional information as the emphasis and supplement to the text.

Revision History

Version	Revision Content	Release Time
V1.0.0	First release.	June 2025

About the Manual

- The manual is for reference only. Slight differences might be found between the manual and the product.
- We are not liable for losses incurred due to operating the product in ways that are not in compliance with the manual.
- The manual will be updated according to the latest laws and regulations of related jurisdictions. For detailed information, see the paper user manual, use our CD-ROM, scan the QR code or visit our official website. The manual is for reference only. Slight differences might be found between the electronic version and the paper version.
- All designs and software are subject to change without prior written notice. Product updates might result in some differences appearing between the actual product and the manual. Please contact customer service for the latest program and supplementary documentation.
- There might be errors in the print or deviations in the description of the functions, operations and technical data. If there is any doubt or dispute, we reserve the right of final explanation.
- Upgrade the reader software or try other mainstream reader software if the manual (in PDF format) cannot be opened.

- All trademarks, registered trademarks and company names in the manual are properties of their respective owners.
- Please visit our website, contact the supplier or customer service if any problems occur while using the device.
- If there is any uncertainty or controversy, we reserve the right of final explanation.

Important Safeguard and Warnings

This section introduces content covering the proper handling of the device, hazard prevention, and prevention of property damage. Read carefully before using the device, and comply with the guidelines when using it.

Transportation Requirements

Transport the device under allowed humidity and temperature conditions.

Storage Requirements

Store the device under allowed humidity and temperature conditions.

Installation Requirements

DANGER

Stability Hazard

Possible result: The device might fall down and cause serious personal injury.

Preventive measures (including but not limited to):

- Before extending the rack to the installation position, read the installation instructions.
- When the device is installed on the slide rail, do not place any load on it.
- Do not retract the slide rail while the device is installed on it.

WARNING

- Do not connect the power adapter to the device while the adapter is powered on.
- Strictly comply with the local electrical safety code and standards. Make sure that the ambient voltage is stable and meets the power supply requirements of the device.
- Personnel working at heights must take all necessary measures to ensure personal safety including wearing a helmet and safety belts.
- Please follow the electrical requirements to power the device.
  - Following are the requirements for selecting a power adapter.
    - The power supply must conform to the requirements of IEC 60950-1 and IEC 62368-1 standards.
    - The voltage must meet the SELV (Safety Extra Low Voltage) requirements and not exceed ES-1 standards.
    - When the power of the device does not exceed 100 W, the power supply must meet LPS requirements and be no higher than PS2.
  - We recommend using the power adapter provided with the device.
  - When selecting the power adapter, the power supply requirements (such as rated voltage) are subject to the device label.

- Do not place the device in a place exposed to sunlight or near heat sources.
- Keep the device away from dampness, dust, and soot.
- Put the device in a well-ventilated place, and do not block its ventilation.
- Use an adapter or cabinet power supply provided by the manufacturer.
- Do not connect the device to two or more kinds of power supplies, to avoid damage to the device.
- The device is a class I electrical appliance. Make sure that the power supply of the device is connected to a power socket with protective earthing.
- When installing the device, make sure that the power plug can be easily reached to cut off the power.
- Voltage stabilizer and lightning surge protector are optional depending on the actual power supply on site and the ambient environment.
- To ensure heat dissipation, the gap between the device and the surrounding area should not be less than 10 cm on the sides and 10 cm on top of the device.
- When installing the device, make sure that the power plug and appliance coupler can be easily reached to cut off power.

Operating Requirements

DANGER

- The device or remote control contains button batteries. Do not swallow the batteries due to the risk of chemical burns.

  Possible result: The swallowed button battery can cause serious internal burns and death within 2 hours.

  Preventive measures (including but not limited to):

  - Keep new and used batteries out of reach of children.
  - If the battery compartment is not securely closed, stop using the product immediately and keep out of reach of children.
  - Seek immediate medical attention if a battery is believed to be swallowed or inserted inside any part of the body.
- Battery Pack Precautions

  Preventive measures (including but not limited to):

  - Do not transport, store or use the batteries in high altitudes with low pressure and environments with extremely high and low temperatures.
  - Do not dispose the batteries in fire or a hot oven, or mechanically crush or cut the batteries to avoid an explosion.
  - Do not leave the batteries in environments with extremely high temperatures to avoid explosions and leakage of flammable liquid or gas.
  - Do not subject the batteries to extremely low air pressure to avoid explosions and the leakage of flammable liquid or gas.

WARNING

- Operating the device in a domestic environment may cause radio interference.
- Place the device in a location that children cannot easily access.
- Do not disassemble the device without professional instruction.
- Operate the device within the rated range of power input and output.

- Make sure that the power supply is correct before use.
- Make sure the device is powered off before disassembling wires to avoid personal injury.
- Do not unplug the power cord on the side of the device while the adapter is powered on.
- Ground the device to protective ground before you power it on.

- Use the device under allowed humidity and temperature conditions.
- Do not drop or splash liquid onto the device, and make sure that there is no object filled with liquid on the device to prevent liquid from flowing into it.
- Operating temperature: –10 °C to +55 °C (+14 °F to +131 °F).
- This is a class A product. In a domestic environment this may cause radio interference in which case you may be required to take adequate measures.
- Do not block the ventilator of the device with objects, such as a newspaper, table cloth or curtain.
- Do not place an open flame on the device, such as a lit candle.

Maintenance Requirements

DANGER

Replacing unwanted batteries with the wrong type of new batteries might result in explosion.

Preventive measures (including but not limited to):

- Replace unwanted batteries with new batteries of the same type and model to avoid the risk of fire and explosion.
- Dispose of the old batteries as instructed.

WARNING

Power off the device before maintenance.

Table of Contents

Foreword I
Important Safeguard and Warnings III
1 Overview 1
1.1 Introduction 1
1.2 Features 1
2 Structure 2
2.1 Front panel 2
2.2 Rear Panel 3
3 Installation 4
3.1 Preparations 4
3.2 Desktop Mount 4
3.3 Rack Mount 4
4 Wiring 5
4.1 Connecting GND Cable 5
4.2 Connecting SFP Ethernet Port 5
4.3 Connecting Ethernet Port 6
4.4 Connecting Console Port 7
4.5 Connecting Power Cord 7
5 Quick Operation 8
5.1 Logging in to the Webpage 8
5.2 Restoring the Device to Its Factory Settings 8
Appendix 1 Security Commitment and Recommendation 9

1 Overview

1.1 Introduction

This product is a 10-Gigabit uplink managed switch. Equipped with a high performance switching engine, the switch performs optimally. It has low transmission delay, large buffer and is highly reliable. The switch can work in environments ranging from –10 °C to +55 °C (+14 °F to +131 °F). The protection for power input end from overcurrent, overvoltage and EMC can effectively resist the interference from static electricity, lightning, and pulse. In addition, through cloud management, webpage management, SNMP (Simple Network Management Protocol), and other functions, the device can be remotely managed. Link aggregation and STP ensure its reliability.

The device is applicable for uses in different scenarios, including small and medium enterprises, chain business, branch agencies, government, schools and hotels.

Cloud management refers to managing this device through the DoLynk apps and webpages. Scan the QR code in the packaging box to learn how to perform cloud management operations.

1.2 Features

- All gigabit ports, and the uplink ports is 10-Gigabit optical ports.
- Supports STP and RSTP.
- Supports VLAN configuration based on IEEE802.1Q.
- Supports static and dynamic link aggregation.
- Supports graphical WEB management and easy operation.
- EMC high protection design.
- Desktop mount and rack mount.

2 Structure

2.1 Front panel

Figure 2-1 Front panel

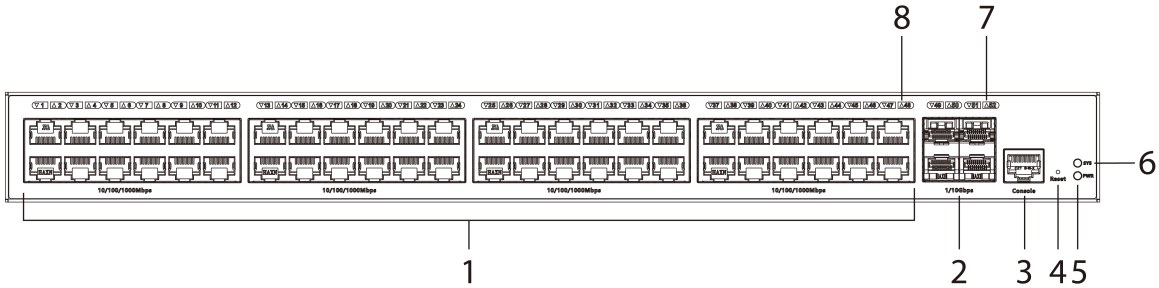

Table 2-1 Front panel description

No.	Name	Description
1	RJ-45 port	10/100/1000 Mbps self-adaptative Ethernet port.
2	SFP+ Port	Supports 1/10 Gbps.
3	Console port	Debugging serial port.
4	Reset button	Press and hold the button for over 5 seconds, wait until all the indicators are solid on, and then release it. The device recovers to the default settings.
5	Power (PWR) indicator	Displays the power status of the device in real time. ● On: Power on. ● Off: Power off.
6	System (SYS) indicator	● Flashes: The system works normally. ● Off: The system is not working normally.
7	Uplink SFP+ optical port status indicator	● On: Connected to device. ● Off: Not connected to device. ● Flashes: Data transmission is in progress.
8	Port connection status indicator	● Solid green: Connected to device, and the transmission rate is negotiated to 1000 Mbps. ● Green flashes: Data transmission is in progress. ● Solid yellow: Connected to device, and the transmission rate is negotiated to 10/100 Mbps. ● Yellow flashes: Data transmission is in progress. ● Off: Not connected to device.

2.2 Rear Panel

Figure 2-2 Rear Panel

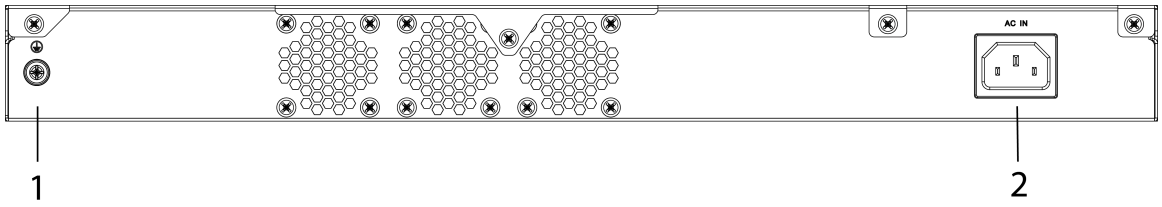

Table 2-2 Rear panel description

No.	Name	Description
1	Grounding terminal	Connects to the grounding wires.
2	Power port	Supports 100–240 VAC.

3 Installation

3.1 Preparations

- Select a proper installation method according to your actual needs.
- Make sure that the working platform is stable and steady.
- Leave about 10 cm space for heat dissipation to ensure good ventilation.

3.2 Desktop Mount

The device supports desktop mount. You can directly place it on a solid and flat desktop.

3.3 Rack Mount

Procedure

Step 1 Attach the mounting brackets to the switch (one on each side), and fix them with the provided screws.

Figure 3-1 Attach the mounting brackets

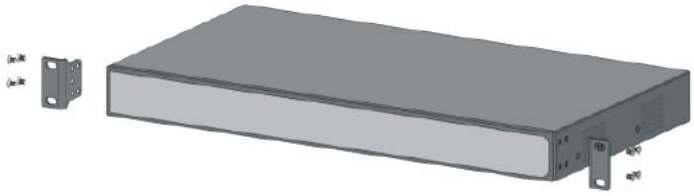

Step 2 Fix the switch onto the rack.

Figure 3-2 Fix the switch onto the rack

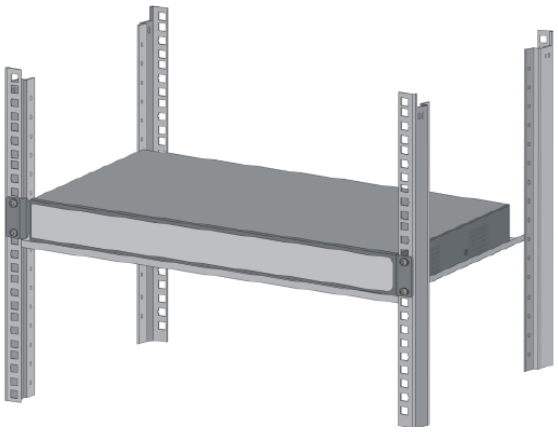

4 Wiring

4.1 Connecting GND Cable

There is a GND screw on the device cover board for the GND cable, which is called enclosure GND. Connect one end of the GND cable with the cold-pressed terminal, and then fix it on the enclosure GND with the GND screw. The other end of the GND cable should be reliably connected to the ground.

- Normal GND of the device is the important guarantee for device lightning protection and anti-interference. You should connect the GND cable before powering on the device, and then power off the device before disconnecting the GND cable.
- Use a yellow-green protective grounding wire with the cross-sectional area of at least 4 mm^2 and the grounding resistance of no more than 4 Ω.

Figure 4-1 Grounding terminal

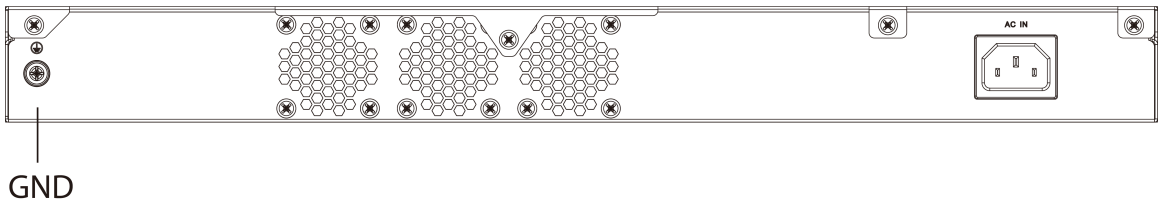

4.2 Connecting SFP Ethernet Port

Prerequisites

We recommend wearing antistatic gloves before installing SFP module, and then wear antistatic wrist, and confirm the antistatic wrist is well linked to the surface of the gloves.

Procedure

Step 1 Lift the handle of SFP module upward vertically and make it get stuck to the top hook.

Step 2 Hold the SFP module on both sides and push it gently into the SFP slot till the SFP module is firmly connected to the slot (You can feel that both the top and bottom spring strip of the SFP module are firmly stuck with the SFP slot).

WARNING

The device uses laser to transmit signal via optical fiber cable. The laser conforms to the requirements of level 1 laser products. To avoid injury upon eyes, do not look at the 1000 Base-X optical port directly when the device is powered on.

- When installing the SFP optical module, do not touch the gold finger of the SFP optical module.
- Do not remove the dust plug of the SFP optical module before connecting the optical port.
- Do not directly insert the SFP optical module with the optical fiber inserted into the slot. Unplug the optical fiber before installing it.

Figure 4-2 SFP module structure

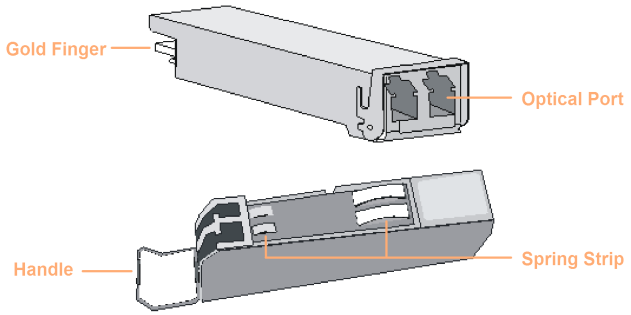

Figure 4-3 SFP module installation

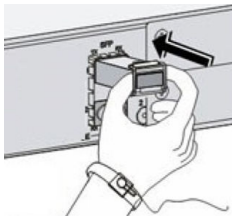

4.3 Connecting Ethernet Port

Ethernet port adopts standard RJ–45 port. Equipped with self-adaptation function, it can be automatically configured to full duplex/half-duplex operation mode, and supports MDI/MDI-X self-recognition function of the cable, which means that the switch can use cross-over cable or straight-through cable to connect terminal device to network device.

Figure 4-4 Ethernet port pin number

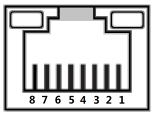

The cable connection of RJ–45 connector conforms to the standard 568B (1-orange&white, 2-orange, 3-green&white, 4-blue, 5-blue&white, 6-green, 7-brown&white, 8-brown).

Figure 4-5 Pin description

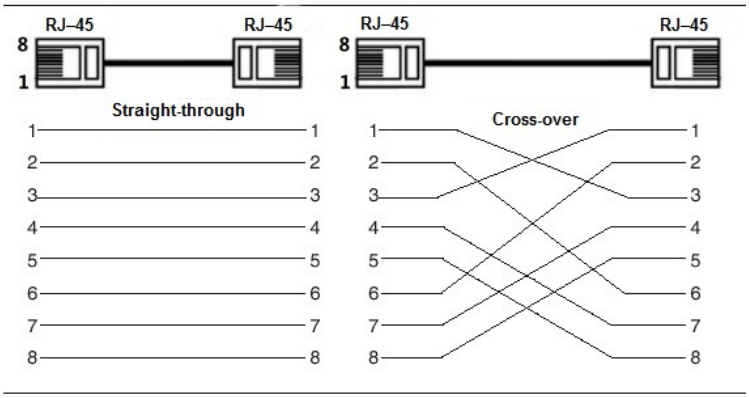

4.4 Connecting Console Port

The switch console port and computer controlling 9-pin serial port are connected with RJ-45 DB9 cable. You can call the console software of the device by operating the superterminal software of the Windows system for device configuration, maintenance, and management.

Figure 4-6 Console port

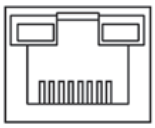

One end of RJ–45 DB9 cable is RJ–45 connector, which needs to be inserted into the console port of the device. And the other end is DB9 plug, which needs to be inserted into the computer controlling 9-pin serial port.

Figure 4-7 Cable sequence of RJ45 DB9

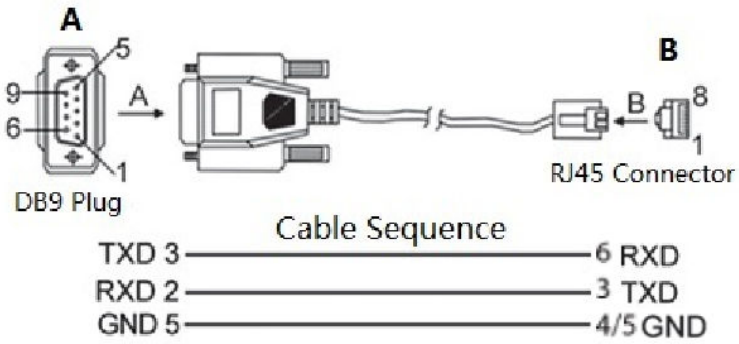

Table 4-1 Pin description

DB9 pin	RJ–45 pin	Signal	Description
3	6	RXD	Receiving data
2	3	TXD	Transmitting data
5	4/5	GND	GND

4.5 Connecting Power Cord

Background Information

Make sure that the switch is reliably grounded before connecting the power cord.

Procedure

Step 1 Connect one end of the power cord into the power jack of the device accurately.

Step 2 Connect the other end of the power cord to the external power socket.

5 Quick Operation

5.1 Logging in to the Webpage

You can log in to the webpage to perform operations on the device and manage it.

For first-time login, follow the on-screen prompts to set your password.

Table 5-1 Default factory settings

Parameter	Description
IP address	192.168.1.110/255.255.255.0
Username	admin
Password	You need to set the password for first-time login.

5.2 Restoring the Device to Its Factory Settings

There are 2 ways to restore the device to its factory settings.

- Press and hold the **Reset** button for 5 seconds.
- Log in to the webpage of the device and perform the required steps for factory reset. For information on these steps, see the user manual of the device.

Appendix 1 Security Commitment and Recommendation

Dahua Vision Technology Co., Ltd. (hereinafter referred to as "Dahua") attaches great importance to cybersecurity and privacy protection, and continues to invest special funds to comprehensively improve the security awareness and capabilities of Dahua employees and provide adequate security for products. Dahua has established a professional security team to provide full life cycle security empowerment and control for product design, development, testing, production, delivery and maintenance. While adhering to the principle of minimizing data collection, minimizing services, prohibiting backdoor implantation, and removing unnecessary and insecure services (such as Telnet), Dahua products continue to introduce innovative security technologies, and strive to improve the product security assurance capabilities, providing global users with security alarm and 24/7 security incident response services to better protect users' security rights and interests. At the same time, Dahua encourages users, partners, suppliers, government agencies, industry organizations and independent researchers to report any potential risks or vulnerabilities discovered on Dahua devices to Dahua PSIRT, for specific reporting methods, please refer to the cyber security section of Dahua official website.

Product security requires not only the continuous attention and efforts of manufacturers in R&D, production, and delivery, but also the active participation of users that can help improve the environment and methods of product usage, so as to better ensure the security of products after they are put into use. For this reason, we recommend that users safely use the device, including but not limited to:

Account Management

1. **Use complex passwords**

   Please refer to the following suggestions to set passwords:

   - The length should not be less than 8 characters;
   - Include at least two types of characters: upper and lower case letters, numbers and symbols;
   - Do not contain the account name or the account name in reverse order;
   - Do not use continuous characters, such as 123, abc, etc.;
   - Do not use repeating characters, such as 111, aaa, etc.
2. **Change passwords periodically**

   It is recommended to periodically change the device password to reduce the risk of being guessed or cracked.
3. **Allocate accounts and permissions appropriately**

   Appropriately add users based on service and management requirements and assign minimum permission sets to users.
4. **Enable account lockout function**

   The account lockout function is enabled by default. You are advised to keep it enabled to protect account security. After multiple failed password attempts, the corresponding account and source IP address will be locked.
5. **Set and update password reset information in a timely manner**

   Dahua device supports password reset function. To reduce the risk of this function being used by threat actors, if there is any change in the information, please modify it in time. When setting security questions, it is recommended not to use easily guessed answers.

Service Configuration

1. **Enable HTTPS**

   It is recommended that you enable HTTPS to access Web services through secure channels.
2. **Encrypted transmission of audio and video**

   If your audio and video data contents are very important or sensitive, we recommend you to use encrypted transmission function in order to reduce the risk of your audio and video data being eavesdropped during transmission.
3. **Turn off non-essential services and use safe mode**

   If not needed, it is recommended to turn off some services such as SSH, SNMP, SMTP, UPnP, AP hotspot etc., to reduce the attack surfaces.

   If necessary, it is highly recommended to choose safe modes, including but not limited to the following services:

   - SNMP: Choose SNMP v3, and set up strong encryption and authentication passwords.
   - SMTP: Choose TLS to access mailbox server.
   - FTP: Choose SFTP, and set up complex passwords.
   - AP hotspot: Choose WPA2-PSK encryption mode, and set up complex passwords.
4. **Change HTTP and other default service ports**

   It is recommended that you change the default port of HTTP and other services to any port between 1024 and 65535 to reduce the risk of being guessed by threat actors.

Network Configuration

1. **Enable Allowlist**

   It is recommended that you turn on the allowlist function, and only allow IP in the allowlist to access the device. Therefore, please be sure to add your computer IP address and supporting device IP address to the allowlist.
2. **MAC address binding**

   It is recommended that you bind the IP address of the gateway to the MAC address on the device to reduce the risk of ARP spoofing.
3. **Build a secure network environment**

   In order to better ensure the security of devices and reduce potential cyber risks, the following are recommended:

   - Disable the port mapping function of the router to avoid direct access to the intranet devices from external network;
   - According to the actual network needs, partition the network: if there is no communication demand between the two subnets, it is recommended to use VLAN, gateway and other methods to partition the network to achieve network isolation;
   - Stablish 802.1x access authentication system to reduce the risk of illegal terminal access to the private network.

Security Auditing

1. **Check online users**

   It is recommended to check online users regularly to identify illegal users.
2. **Check device log**

By viewing logs, you can learn about the IP addresses that attempt to log in to the device and key operations of the logged users.

3. **Configure network log**

   Due to the limited storage capacity of devices, the stored log is limited. If you need to save the log for a long time, it is recommended to enable the network log function to ensure that the critical logs are synchronized to the network log server for tracing.

Software Security

1. **Update firmware in time**

   According to the industry standard operating specifications, the firmware of devices needs to be updated to the latest version in time in order to ensure that the device has the latest functions and security. If the device is connected to the public network, it is recommended to enable the online upgrade automatic detection function, so as to obtain the firmware update information released by the manufacturer in a timely manner.

2. **Update client software in time**

   We recommend you to download and use the latest client software.

Physical Protection

It is recommended that you carry out physical protection for devices (especially storage devices), such as placing the device in a dedicated machine room and cabinet, and having access control and key management in place to prevent unauthorized personnel from damaging hardware and other peripheral equipment (e.g. USB flash disk, serial port).

ENABLING A SMARTER SOCIETY AND BETTER LIVING

ZHEJIANG DAHUA VISION TECHNOLOGY CO., LTD.
Address: No. 1399, Binxing Road, Binjiang District, Hangzhou, P. R. China | Website: www.dahuasecurity.com | Postcode: 310053
Email: dhoverseas@dhvisiontech.com | Tel: +86-571-87688888 28933188