WingX Neo Barrier

Quick Start Guide

V1.0.0

Foreword

General

This manual introduces the installation, functions and operations of the neo boom barrier (hereinafter referred to as "the Barrier"). Read carefully before using the Barrier, and keep the manual safe for future reference.

Safety Instructions

The following signal words might appear in the manual.

Signal Words	Meaning
DANGER	Indicates a high potential hazard which, if not avoided, will result in death or serious injury.
WARNING	Indicates a medium or low potential hazard which, if not avoided, could result in slight or moderate injury.
CAUTION	Indicates a potential risk which, if not avoided, could result in property damage, data loss, reductions in performance, or unpredictable results.
TIPS	Provides methods to help you solve a problem or save time.
NOTE	Provides additional information as a supplement to the text.

Privacy Protection Notice

As the device user or data controller, you might collect the personal data of others such as their face, audio, fingerprints, and license plate number. You need to be in compliance with your local privacy protection laws and regulations to protect the legitimate rights and interests of other people by implementing measures which include but are not limited: Providing clear and visible identification to inform people of the existence of the surveillance area and provide required contact information.

About the Manual

- The manual is for reference only. Slight differences might be found between the manual and the product.
- We are not liable for losses incurred due to operating the product in ways that are not in compliance with the manual.
- The manual will be updated according to the latest laws and regulations of related jurisdictions. For detailed information, see the paper user's manual, use our CD-ROM, scan the QR code or visit our official website. The manual is for reference only. Slight differences might be found between the electronic version and the paper version.
- All designs and software are subject to change without prior written notice. Product updates might result in some differences appearing between the actual product and the manual. Please contact customer service for the latest program and supplementary documentation.
- There might be errors in the print or deviations in the description of the functions, operations and technical data. If there is any doubt or dispute, we reserve the right of final explanation.
- Upgrade the reader software or try other mainstream reader software if the manual (in PDF format) cannot be opened.
- All trademarks, registered trademarks and company names in the manual are properties of their respective owners.
- Please visit our website, contact the supplier or customer service if any problems occur while using the Camera.
- If there is any uncertainty or controversy, we reserve the right of final explanation.

Important Safeguards and Warnings

This section introduces content covering the proper handling of the device, hazard prevention, and prevention of property damage. Read carefully before using the device, and comply with the guidelines when using it.

Transportation Requirements

CAUTION

- Pack the device with packaging provided by its manufacturer or packaging of the same quality before transporting it.
- Transport the device under allowed humidity and temperature conditions.

Storage Requirements

CAUTION

Store the device under allowed humidity and temperature conditions.

Installation Requirements

WARNING

- Strictly comply with the local electrical safety code and standards. Make sure the ambient voltage is stable and meets the power supply requirements of the device.
- Do not connect the device to two or more kinds of power supplies, to avoid damage to the device.
- Do not perform any operations while powered. Disconnect all power sources before wiring, installation, or disassembly.
- Use the accessories suggested by the manufacturer. Installation and maintenance must be performed by qualified professionals.

CAUTION

- Put the device in a well-ventilated place, and do not block its ventilation.
- Use an adapter or cabinet power supply provided by the manufacturer.
- A safety circuit breaker is designed on the connector of the Device to cut the power of the Device. Make sure the breaker can be easily operated during installation.

Operation Requirements

CAUTION

- Do not operate the Barrier in wind conditions of Force 6 or higher, including typhoons. It is recommended to remove the barrier arm.
- Do not use the product in environments with strong electromagnetic interference, such as near large motor equipment or around radio transmission towers. If interference occurs, try adjusting the product's position or contact the manufacturer to replace with components of a different frequency band.
- Use the device under allowed humidity and temperature conditions.
- Use the device within the power supply requirements specified for the equipment.
- Make sure that the power supply is correct before use.
- Ensure that the device is properly grounded before connecting the power.
- Do not touch exposed terminals or components after the device is powered on to prevent electric shock.
- Do not vibrate, squeeze or immerse the device in liquid during transportation, storage or installation.
- When the barrier is in operation, do not place any objects on the barrier arm and do not stand under the barrier arm to prevent injury from being struck.
- We recommend you use the device with a lightning protection device for stronger protection against lightning. For outdoor scenarios, strictly comply with the lightning protection regulations.

Maintenance Requirements

CAUTION

- The power supply for the Barrier should be connected according to the *User's Manual*. The control board in the terminal box will have non-safe voltages when powered on. Do not plug or unplug RS-232, RS-485, or other cables while the system is powered. Additionally, do not touch any components while the Barrier is in operation.
- When the Barrier is in motion, do not open the cabinet door or cover to prevent accidental personal injury.
- The internal wiring of the device is completed at the factory. Under normal circumstances, do not make any changes.

Low-Power Short-Range Device Declaration

CAUTION

- The device complies with the technical requirements for Class H general low-power devices, and is intended for radar applications. It uses an integrated antenna. For control, switching, and other information, refer to the User's Manual.
- Do not alter the usage scenarios or conditions, expand the transmission frequency range, or increase the transmission power (including the installation of additional RF power amplifiers). Do not modify the transmission antenna.

- The device must be able to withstand interference from industrial, scientific, and medical (ISM) applications and other legitimate radio stations.
- The device must not cause harmful interference to other legitimate radio stations and cannot claim protection from such interference.
- If the device causes harmful interference to other legitimate radio stations, use must be immediately stopped, and measures must be taken to eliminate the interference before resuming use.
- Comply with electromagnetic protection regulations and relevant industry standards when using the device in aircraft, radio astronomical observatories, meteorological radar stations, satellite earth stations (including control, ranging, reception, and navigation stations), and other defense and civilian radio stations, as well as in airport electromagnetic protection zones.
- Use of model remote controllers is prohibited within a 5000-meter radius of the center point of airport runways.
- The temperature and voltage conditions for the low-power section are the same as those for the device.

1. Introduction

1.1 Overview

The Barrier is an access control device used to manage vehicle entrance and exit on roadways. It can be controlled by various methods, such as parking management systems, ANPR (Automatic Number Plate Recognition) cameras, remote controls or buttons.

Due to its characteristics, the Barrier is widely used in entrance and exit scenarios of parking lots, hotels, schools, residential areas and enterprises.

1.2 Features

- Made from 1.5 mm thick high-quality cold-rolled steel, the casing is treated with phosphating and powder coating to enhance corrosion resistance.
- Equipped with a 24 VDC permanent magnet synchronous motor and a springless design for stable operation.
- Features high-brightness LED signal indicators and soft breathing lights to display the current status, ensuring a simple and elegant appearance.
- Supports app settings, allowing control of barrier operation and retrieval of operation counts and operation status.
- Supports automatic rod length adaptation, adjusting parameters upon each power-up.
- Supports quick left-right direction change.
- Supports automatic rod lifting in case of power failure.
- Supports speed adjustment of rod lifting and lowering.
- Supports adjustment of limit switch positions.
- Supports external radar, loop detectors, and infrared anti-drop functionality, with an integrated 12V 1A power supply for external radar power.
- Supports rebound on obstruction. The rod will automatically rebound if it encounters an obstacle during lowering.
- Supports remote control for opening and closing the Barrier, with a maximum range of 50 meters (in open conditions).
- Supports one-touch always-open mode; holding the open button for 4 seconds enters always-open mode, and pressing the close button exits it.
- Supports counting mode. The Barrier will automatically close after the number of vehicles passing matches the number of open signals.
- Supports delayed closing, with adjustable delay time and closing speed.

2. Structure

2.1 Appearance

Figure 2-1 Telescopic straight arm barrier (right-oriented and telescopic rod)

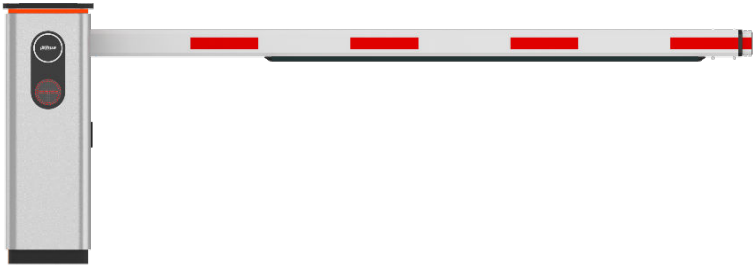

Figure 2-2 Telescopic straight arm barrier (right-oriented and straight rod)

Figure 2-3 Folding arm barrier (right-oriented)

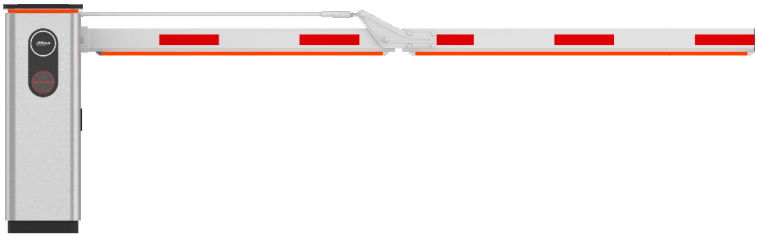

Figure 2-4 Cylindrical arm barrier (right-oriented)

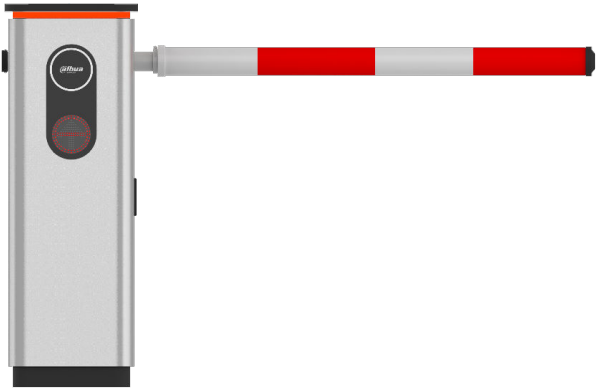

2.2 Structure Description

Figure 2-5 Overall structure

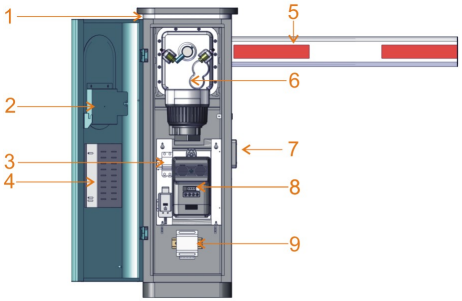

Table 2-1 Description of overall structure

No.	Name	Description
1	Breathing Light Strip	Green light during and upon completion of the opening process; red light during and upon completion of the closing process.
2	Signal Indicator	Green light during and upon completion of the opening process; red light during and upon completion of the closing process.
3	Circuit Breaker	Connects to mains electricity: 90–264 VAC.
4	Super Capacitor	Stores 24 VDC energy, used for automatic barrier opening in case of a power failure.
5	Barrier Arm	Can be replaced with different styles of barrier arms as needed.
6	Mechanism Assembly	The main component of the transmission mechanism.
7	Anti-smash Radar	Detects the presence of vehicles to prevent smashing and to automatically close the gate after a vehicle passes.
8	Controller Assembly	Includes the controller, power supply, and electronic clutch control unit.
9	Wiring Box	The wiring box for external signal input.

Figure 2-6 Mechanism structure

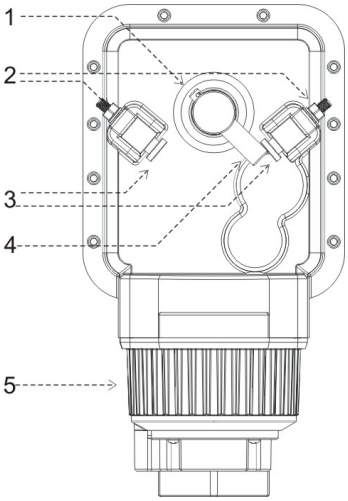

Table 2-2 Description of mechanism structure

No.	Name	Description
1	Cotter Pin	Used to secure the limit pressure rod.
2	Locking Nut	Used to lock the mechanical limit adjustment bolt.
3	Mechanical Limit Adjustment Bolt	Used to adjust the mechanical limit positions for the open and close directions separately.
4	Limit Pressure Rod	Forms a rigid connection with the rod clamp, used for mechanical limiting.
5	Motor	Source of power.

3. Installation

This section introduces basic requirements for selecting and constructing the foundation. For details on installing the Barrier, see the construction guide.

3.1 Installation Preparation

- The location should be prominent, with the barrier arm facing outward (towards the intersection), and the bottom of the Barrier should be flush with the road surface.
- The installation location must provide sufficient space for the barrier arm to swing.
- Construct the foundation according to the site conditions. If the ground is already concrete, use the provided expansion bolts to secure the casing directly. For non-concrete surfaces, a cast-in-place foundation is required, with a height of 150 mm to 200 mm above the ground. Heights outside this range can significantly affect radar detection accuracy.
- For the crash-resistant barrier, ensure there are no obstacles within the 90° rotation range of the barrier arm when it is hit.
- Pre-bury the cables, with the conduit extending 50 mm above the ground to prevent water from entering and causing a short circuit.
- Before installation, select the location and device type according to the installation guide.

3.2 Installing the Casing

Procedure

Step 1 Unpack the packing box and remove the accessories.

Step 2 Mark the installation position of the Barrier and use a screwdriver to outline the four expansion bolt holes on the ground. The installation position should meet the requirements shown in the following figure to facilitate installing the pressure plate and fixing the casing.

Step 3 Drill the expansion bolt holes with a drill bit, with a diameter of Φ16 mm and a depth of 110 mm to 120 mm. Insert the expansion bolts, ensuring that the bolts protrude from the ground by at least 100 mm. Adjust the horizontal and vertical positions of the casing and tighten the nuts.

Figure 3-1 Installing the casing

mm[inch]

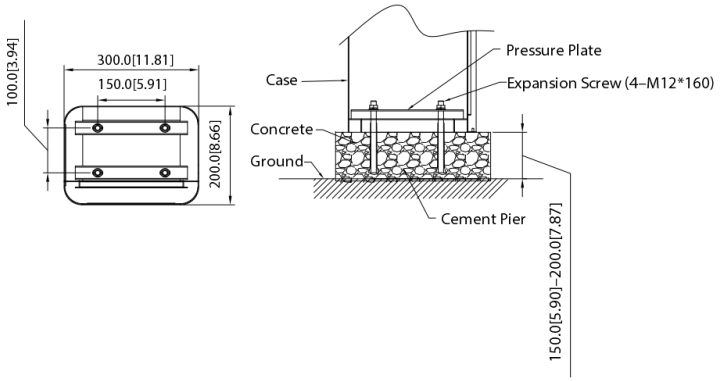

3.3 Installing the Barrier Arm

The following installation figures are for reference only, and might differ from the actual product.

3.3.1 Installing the Straight Arm

Procedure

Step 1 Use 2x M12*70 hexagon head bolts to pass through the fixing holes of the pressure plate and the arm.

Step 2 Hold the pressure plate, and raise the arm vertically next to the arm handle clamp.

Step 3 Insert the power plug of the arm light strip, and tuck the plug and wiring harness into the holes of the arm handle clamp and the arm respectively.

Step 4 Sequentially install the flat washer, spring washer, and M12 nut onto the bolt, and secure the bolt with an open-end wrench.

Figure 3-2 Installing the straight arm

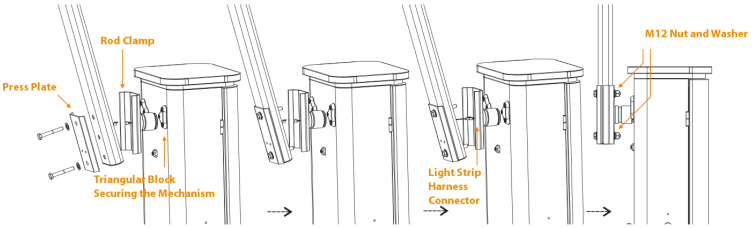

3.3.2 Installing the Folding Arm

Procedure

Step 1 Use the support plate assembly to replace the triangular block to secure the mechanism, and install the arm shaft onto the support plate assembly, fastening it with screws.

Step 2 Use 2x M12*70 hexagon head bolts to pass through the fixing holes of the pressure plate and the arm.

Step 3 Hold the pressure plate, and raise the arm vertically next to the arm handle clamp.

Step 4 Sequentially install the flat washer, spring washer, and M12 nut onto the bolt, and secure the bolt with an open-end wrench. Then, fit the arm end bearing onto the arm shaft, insert the washer, and secure it with a nut.

Step 5 Loosen the positive and negative teeth of the cast aluminum sleeve, rotate the stainless steel tube, and adjust the level and vertical of the arm respectively; after adjustment, lock the positive and negative teeth of the cast aluminum sleeve.

Figure 3-3 Installing the Folding Arm

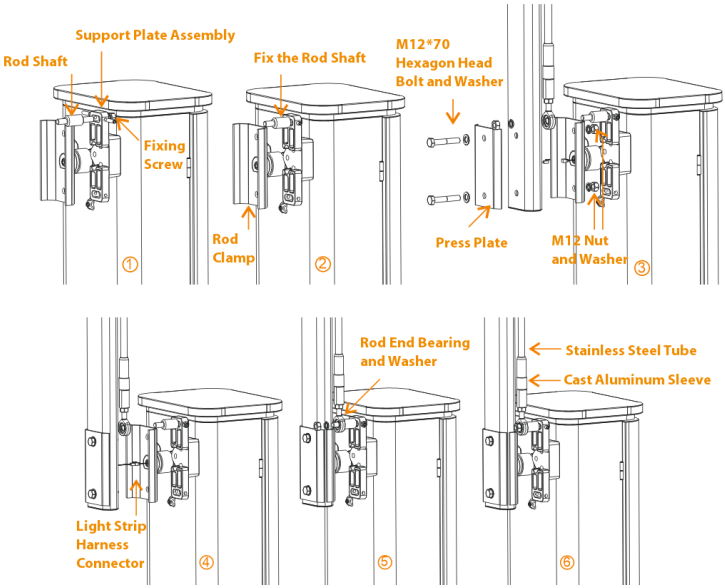

3.3.3 Installing the Cylindrical Arm

Procedure

Step 1 Lift the arm and align the arm fixing plastic buckle hole with the arm handle hole.

Step 2 Pass the fixing screw through the arm handle hole and tighten it.

Step 3 Push the arm into the locking groove of the arm handle clamp.

Figure 3-4 Installing the Cylindrical Arm

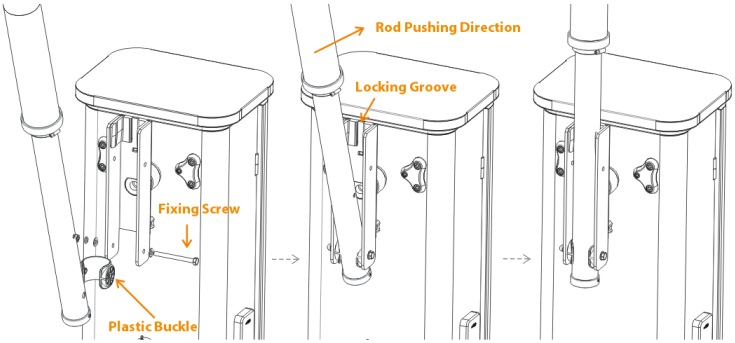

3.4 Wiring Instructions

Figure 3-5 Interface diagram of the wiring box

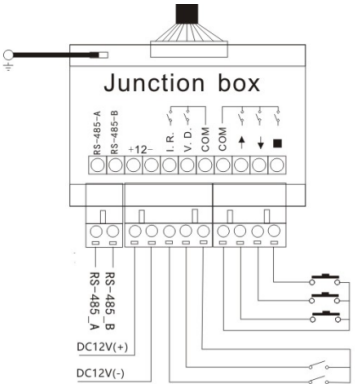

Table 3-1 Interface description of the wiring box

Interface	Description
RS-485-A/ RS-485-B	RS-485 communication interface.
+12/-	12 VDC power output.
I.R./COM	Infrared anti-smash signal input (during the closing process, the Barrier will respond to open when an infrared anti-smash signal is detected).
V.D./COM	Radar anti-smash signal input (during the closing process, the Barrier will respond to open when a radar anti-smash signal is detected).
↑/COM	Signal input to open the Barrier.
↓/COM	Signal input to close the Barrier.
■/COM	Stop signal input.

4. Commissioning and Configuration

4.1 Controller Interface Configuration

Figure 4-1 Electrical wiring diagram of the controller

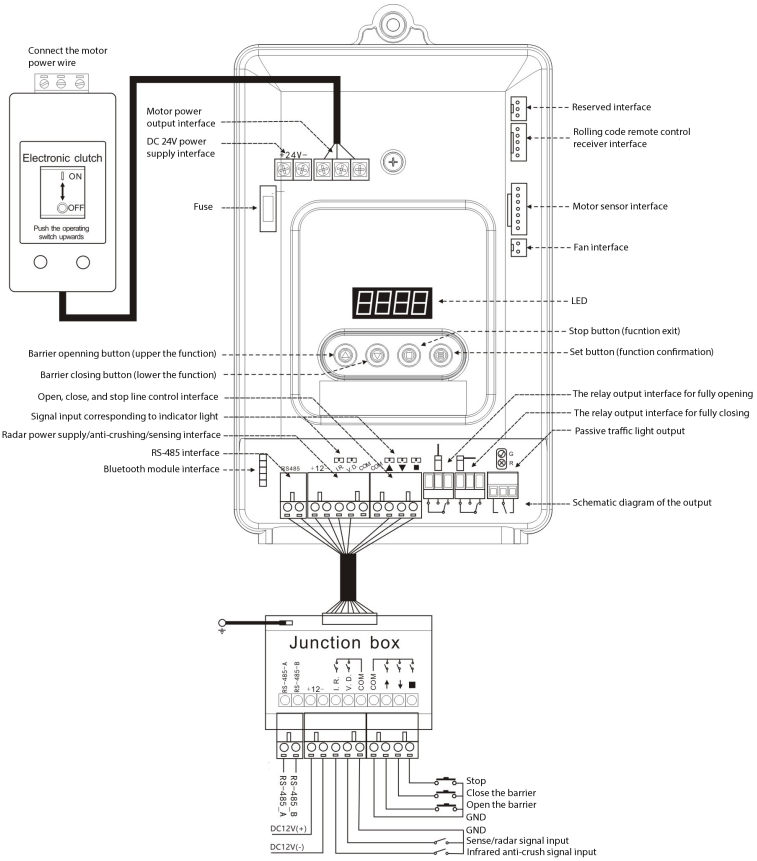

Table 4-1 Interface description of the controller

Interface/Indicator Light/ Button	Description
Line control interface	Users can use this interface to connect to the ANPR camera, and they can also externally connect a button switch to control the barrier. • Open the barrier: Short-circuit ▲ and **GND**. • Close the barrier: Short-circuit ▼ and **GND**. • Stop: Short circuit ■ and **GND**.
Anti-smash interface	• Infrared anti-crush: During the barrier closing process, a short circuit between **Infrared** and **GND** will trigger the barrier opening response. Once fully opened, it will automatically close when the **Infrared** and **GND** are disconnected. • Sense anti-crush: During the closing process, a short circuit between **Sense** and **GND** will trigger the opening. Once fully opened, it will automatically close when the **Sense** and **GND** are disconnected.
DC12V power output	This interface can provide a 1A current output, which can supply power to radar or small light strips.

Interface/Indicator Light/ Button	Description
RS-485 interface	This interface connects to the camera's RS-485 interface through over five types of twisted pairs to monitor the status of the Barrier.
Relay output interface for fully opening/closing	The Barrier is in the fully opening, and the common **COM** output at the fully opening is connected to the normally open **NO**. The Barrier is in the fully closing, and the common **COM** output at the fully closing is connected to the normally open **NO**. The process of opening and closing the Barrier, as well as the intermediate stop, involves the common **COM** and normally closed **NO** being engaged when fully opened and fully closed.
Traffic light interface	The relay has a passive switch output. When the barrier opens to the specified angle, the **COM** and green light of the interface are short-circuited. During the closing process and when the barrier is fully closed, the **COM** and red light of the interface are short-circuited.
Function buttons	The four buttons have 2 working states: normal working state and menu setting state. In the normal working state, the function of the ▲ is to open the gate, the ▼ is to close the gate, the ■ is for the stop function, and a short press of the ≡ has no function, while a long press of 2 seconds could enter the menu setting state. In the menu setting state, the ▲ and ▼ are used to adjust menu items or parameters, the ■ is for canceling the set value or exiting the menu setting state, and the ≡ is for entering the next level of the menu or saving the set value.
LED digital tube	It can be used to display information such as the working status, parameters, and menu items of the barrier gate.
Electronic clutch switch	When the power is out, switch down to ○ to unlock the motor, allowing you to manually lift the lever to open the barrier. After lifting, switch up to 1 to lock the motor, preventing the lever from slipping. During the operation of the barrier when powered, the green indicator lights for both motors will flash.

4.2 LED Configuration

Table 4-2 Content description of LED digital tube

Content	Description
STOP	Barrier fully closed or in stop state.
LocK	Barrier locked, entering fleet mode.
uPxx	Barrier opening memory count when counting function is enabled, xx is the count (displayed only when counting function is enabled).
dExx	Automatic delay closing time, xx is the countdown time (displayed only when delay function is enabled).
Fdxx	Software version, xx is the version number; higher numbers indicate newer versions. Displayed first on power-up.
Loxx	Displays when the Barrier is triggered to open by low voltage; xx is the H-47 setting value.
uLxx	Current power input voltage, xx is the voltage value. Displays internal 24V power voltage on power-up.
cLOS	The Barrier is closing.
OPEN	The Barrier is opening.
HOLd	The Barrier is fully opened.

4.3 Controller Parameter Configuration

Press and hold ≡ for 2 seconds to enter the regular menu setting state, and the LED will display **F-XX** . Short press or long press ▲ and ▼ to select menu items. Short press once to add or subtract one, and long press to add or subtract continuously. When the **F-XX** item displayed on the LED is the parameter to be set, press ≡ again to enter the setting of the specified item, and press ■ to return to the previous level or exit the setting. After setting the specified parameters, you must press ≡ for confirmation to take effect. Pressing ■ will not bring the currently set parameters into effect.

Table 4-3 Command list of the regular menu

Menu	Function	Default Value	Range	Note
F-00	Gate opening speed	48	15–100	The higher the value, the faster the gate opens.
F-01	Gate closing speed	30	15–100	The higher the value, the faster the gate closes.

Menu	Function	Default Value	Range	Note
F-02	Gate opening deceleration position	65	10–80	The angle at which the gate starts to decelerate when opening. The unit: is degrees.
F-03	Gate closing deceleration position	50	10–80	The angle at which the gate starts to decelerate when closing. The unit is degrees.
F-04	Angle to decelerate during gate opening	90	15–90	The angle at which the gate enters the final low-speed zone when opening
F-05	Angle to decelerate during gate closing	0	0–75	The angle at which the gate enters the final low-speed zone when closing.
F-06	Gate opening end speed	7	1–50	The speed at which the gate reaches its final position of opening.
F-07	Gate closing end speed:	1	1–50	The speed at which the gate reaches its final position of closing.
F-08	Horizontal position adjustment	18	1–600+	Fine-tuning the horizontal position of the barrier arm.
F-09	Vertical position adjustment:	490	1–600+	Fine-tuning the vertical position of the barrier arm.
F-10	Auto-closing delay time	0	0–255	The time delay before the barrier automatically closes when no vehicle is detected. The unit: is seconds.
F-11	Reserved	0	0–20	—
F-12	Reserved	0	0–20	—
F-13	Power-on self-learning speed	1–35 2–12	0–80	The speed at which the system finds the upper and lower limits.
F-14	Remote control pairing and clearing	0	0–40	Adding a remote control or clearing all remote controls.
F-15	Obstacle bounce sensitivity	2	1–40	The smaller the value, the more sensitive to obstacles.

Table 4-4 Description of regular menu

Menu	Function	Description
F-00	Gate opening speed	—
F-01	Gate closing speed	—
F-02	Gate opening deceleration position	Used to set the position where deceleration begins during the gate opening process. The angle is measured in degrees, with 0° being the fully closed position and 90° being the fully open position. This parameter indicates the angle at which the barrier arm starts to decelerate. If the barrier arm swings excessively when fully open, you can reduce this value.
F-03	Gate closing deceleration position	Used to set the position where deceleration begins during the gate closing process. The angle is measured in degrees, with 0° being the fully closed position and 90° being the fully open position. This parameter indicates the angle at which the barrier arm starts to decelerate. If the barrier arm swings excessively when fully closed, you can increase this value.
F-04	Angle to decelerate during gate opening	Sets a low-speed zone during the gate opening process. When the gate angle reaches the angle set by F-04, it runs at the speed set by **F-06** until fully open. If this value is 90, the function is disabled. If the barrier arm swings excessively when fully open, you can appropriately reduce this value.
F-05	Angle to decelerate during gate closing	Sets a low-speed zone during the gate closing process. When the gate reaches this angle, it runs at the speed set by **F-07** until fully closed. If this value is 0, the function is disabled. If the barrier arm swings excessively when fully closed, you can appropriately increase this value.
F-06	Gate opening end speed	The minimum speed at which the gate opens to its final position. The gate will end the opening process at this speed. Setting this parameter too high can cause the barrier arm to swing when fully open.
F-07	Gate closing end speed:	The minimum speed at which the gate closes to its final position. The gate will end the closing process at this speed. Setting this parameter too high can cause the barrier arm to swing when fully closed.

Menu	Function	Description
F-08	Horizontal position adjustment	If the barrier arm is not level when fully closed, you can fine-tune it using this parameter. For details, see Figure 4-2.
F-09	Vertical position adjustment:	If the gate arm is not straight when fully open, you can fine-tune it using this parameter. For details, see Figure 4-3.
F-10	Auto-closing delay time	After the gate is fully open, it will automatically close if no vehicle passes within the set time. If an opening signal is received during the countdown, the timer resets. A closing signal will immediately execute the closing action, and a stop signal will pause the delay. Setting this to 0 disables the function.
F-11	Reserved	—
F-12	Reserved	—
F-13	Power-on self-learning speed	Sets the speed for the initial search of the mechanical limit stop point in the closing direction when powered on. After entering the setting, first set the rebound speed to return the rod to the horizontal closed position after finding the stop point. The display shows **1-XX** , where XX is the rebound speed. You can adjust the speed by pressing ▲ and ▼. The higher the value, the faster the rebound speed. We recommend leaving it as default. After setting the rebound speed, press ≡, and the LED displays **2-XX**, where XX is the speed for finding the mechanical limit stop point. Similarly, you can adjust the speed by pressing ▲ and ▼. The higher the value, the faster the search speed. We recommend leaving it as default. After completing the settings, press ≡ to save the parameters. If you press ■ during the process, the settings will be invalid.
F-14	Remote control pairing and clearing	• Paring: After entering the menu item, the LED displays the number of currently paired remote controls. Long press any button on the remote control to increase the displayed number by 1. You can continue pairing additional remote controls. If the remote control is already paired, the displayed number remains unchanged. After completing the pairing, press ■ to exit the learning mode. • Clearing: After entering the menu item, the LED displays the number of currently paired remote controls. Simultaneously long press ▲ and ▼ for 3 seconds. The LED displays **0** to indicate successful clearing.
F-15	Obstacle bounce sensitivity	When the gate encounters an obstacle and stops for longer than the set time, the gate will rebound and open. The LED displays **Er.ob**. The smaller the value, the higher the sensitivity; the larger the value, the lower the sensitivity. The recommended value for this model is ≤2.

Figure 4-2 Horizontal position adjustment

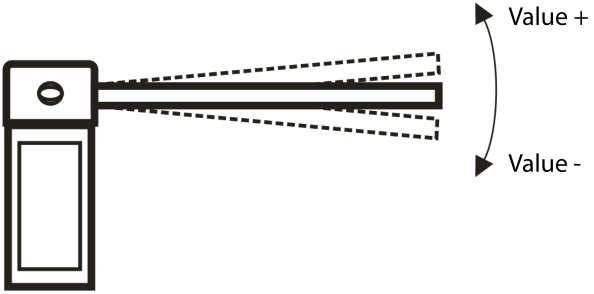

Figure 4-3 Vertical position adjustment

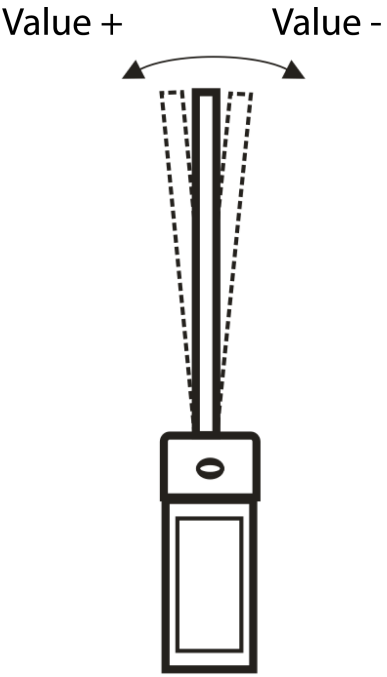

Figure 4-4 Schematic diagram of gate opening/closing

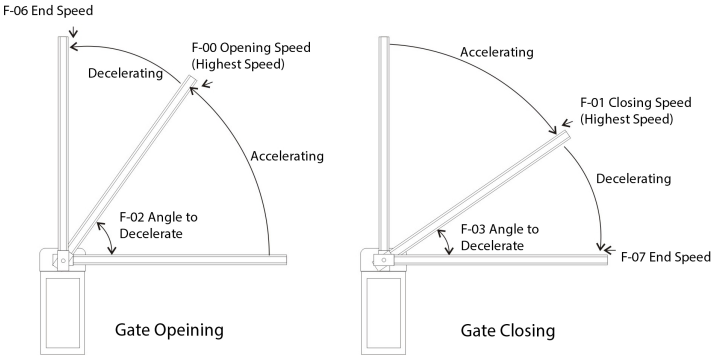

Advanced Menu: Long press ≡ and ■ simultaneously for 2 seconds to enter the **Advanced Menu** mode, and then the LED displays **H-XX**.

The advanced menu is for use by professional technicians only. General users should use it with caution! Do not change any menu items not listed in the table, as this might cause the gate to operate abnormally.

Table 4-5 Command list of advanced menu

Command	Function	Default Value	Range	Note
H-03	Auto-closing delay after a vehicle passes	0	0–255	The gate will automatically close after a delay following vehicle passage. The unit is seconds.
H-05	Motor type and rotation direction	3	0–3	• 2: right direction. • 3: left direction.
H-07	Loop detector count	0	0–10	Default settings: One vehicle triggers one gate operation.
H-08	Automatic test interval	0	0–5	• 0: normal operation. • 1-5: automatic aging test intervals, and the unit is seconds.
H-09	Factory reset	0	0–255	10: Restore factory settings and automatically restart.
H-13	Commissioning method	0	0–255	—
H-17	Angle for traffic light switch	3	0–90	The red light switches to green when the gate opens to the specified angle. The unit is degrees.
H-31	Fleet mode switch	0	0–1	1: Enters the fleet mode using the remote control.
H-38	Loop detector signal beep	1	0–1	• 0: No beep when loop detector signal is present. • 1: Beep when loop detector signal is present.
H-45	Automatic delay closing speed	40	15–100	When the value of **F-10** or **H-03** is bigger than 0, the closing speed is determined by this value.
H-46	Low voltage automatic opening time	3	0–50	The unit is 100 milliseconds. 0: The function is disabled.
H-47	Low voltage automatic opening threshold	21	15–22	Action voltage. The units is volts.
H-49	Bluetooth app login password	—	—	—

Table 4-6 Description of advanced menu

Menu	Function	Description
H-03	Auto-closing delay after a vehicle passes	Unlike **F-10**, this delay starts counting down after the vehicle passes the loop detector. The countdown will reset if a gate opening signal is received, and the gate will close immediately if a gate closing signal is received. A stop signal will pause the current delay. Setting this to 0 disables the function, and the gate will close immediately after the vehicle passes.
H-05	Motor type and rotation direction	This parameter is only used for settings 2–3. 2 indicates right direction, and 3 indicates left direction.
H-07	Loop detector count	The number of times the loop detector relay closes must match the number of gate openings for the gate to close automatically after a vehicle passes. The value represents the maximum consecutive memory of gate openings. 0 means disabled.
H-08	Automatic test interval	Automatic aging test interval. The test continues after a power cycle. Pressing the stop button during gate opening or closing will disable the aging test function.
H-09	Factory reset	Setting this option to 10 and pressing ≡ will restore all parameters to their default values and automatically restart the system. This operation does not affect paired remote controls.

Menu	Function	Description
H-13	Commissioning method	• **0** : Automatic rod length adaptation. • **1** : Rod length ≤ 3 meters. • **2** : Rod length ≤ 4 meters. • **3** : Rod length ≤ 5 meters. • **4** : Rod length ≤ 6 meters. • **255** : User-defined parameters. Setting this option to 0–4 will automatically import preset parameters (**F-00** – **F-09** , **F-13** , **F-15**). If the user changes parameters of F-00–F-09, this option will automatically change to 255, and the controller will continue to use the user-defined parameters after a power cycle.
H-17	Angle for traffic light switch	During the gate closing process and when the gate is fully closed, the signal light is red. When the gate opens to the angle set by this option, the signal light switches to green. The signal light on the gate panel, the top of the control box, and the rod light strip will all change color simultaneously.
H-31	Fleet mode switch	Setting this option to 1 allows the remote control to enter fleet mode directly after opening the gate. The LED displays **Lock**. The gate will not close automatically when a vehicle passes the loop detector, but close only when the remote control sends a close signal or an external close signal is received, and the fleet mode will be canceled after the gate closes.
H-38	Loop detector signal beep	• 0: No beep when a loop detector signal is present. • 1: The buzzer beeps (**beep beep beep**) when a loop detector signal is present during the gate opening process or when the gate is fully open.
H-45	Automatic delay closing speed	When **F-10** or **H-03** is set to a value greater than 0, the gate will close automatically at the speed specified by this parameter when the countdown reaches 0. A smaller value indicates a slower closing speed, and a larger value indicates a faster closing speed. If the gate encounters resistance and bounces back, increase this value.
H-46	Low voltage automatic opening time	Works with **H-47** to automatically open the gate when the supply voltage drops below the set threshold and remains low for the time specified by this parameter. The LED displays **loxx** (xx represents the value of **H-47**) when the gate is fully opened. This function requires a supercapacitor backup power module. Setting this to 0 disables the function.
H-47	Low voltage automatic opening threshold	Sets the voltage threshold for the automatic gate opening function. When the supply voltage drops below this value and remains low for the time specified by **H-46**, the gate will open automatically.
H-49	Bluetooth app login password	The login password for the Bluetooth app to control the gate. Users can modify the password as required.

4.4 Quick Commissioning Guide

- For environments without eaves, the Barrier supports 2 methods for quick commissioning.

  For cylindrical barriers, it is recommended to use Method 2 to import preset parameters for commissioning.

- For environment with eaves: The self-adaptive function of the rod does not support this environment. After setting the **H-13** value according to Method 2, reduce the **F-09** value for the vertical position (half of the original value for a 45-degree rod lift) until the rod does not touch the eaves.

Method 1

Rod Length Self-Adaptation: When the gate is powered on, it will automatically inspect and adjust the rod length and running parameters the first time it opens. Involved parameter settings: **H-13** is set to 0 (default).

Method 2

1. Importing Preset Parameters: Select the appropriate preset parameters based on the length of the installed rod. The parameter settings of **H-13** are as follows:
   - Straight/Telescopic/Folding Arm
     - Rod length ≤ 3 meters: Set **H-13** to 1.
     - Rod length ≤ 4 meters: Set **H-13** to 2.
     - Rod length ≤ 5 meters: Set **H-13** to 3.

- ◇ Rod length ≤ 6 meters: Set **H-13** to 4.
- Round Arm
  - ◇ Rod length ≤ 3 meters: Set **H-13** to 11.
  - ◇ Rod length ≤ 3.5 meters: Set **H-13** to 12.
  - ◇ Rod length ≤ 4 meters: Set **H-13** to 13.

2. After setting, use the remote control to operate the gate and observe if the operation is smooth. If there are issues, make the following parameter adjustments:
   - Gate shakes when fully opened: Decrease **F-02** first, and then decrease **F-06** if necessary.
   - The rod is not vertical when fully opened (tilts forward): Increase **F-09** until the rod is vertical (note the position of the limit pressure bar and the limit adjustment screw).
   - The rod is not vertical when fully opened (tilts backward): Decrease **F-09** until the rod is vertical.
   - Gate shakes when fully closed: Increase **F-03** and decrease **F-07**.
   - The rod is not level when fully closed (downward): Power off the gate while it is in the raised position. According to the structure shown in Figure 2-6, adjust the mechanical limit adjustment screw counterclockwise to extend it slightly so that it can touch the limit pressure bar when the rod is horizontal. Power on the controller and observe the rod's horizontal position.
   - The rod is not level when fully closed (upward): If the limit pressure bar does not touch the limit adjustment screw, decrease the value of **F-08**. If it does touch, power off the gate while it is in the raised position. According to the structure shown in Figure 2-6, adjust the mechanical limit adjustment screw clockwise to retract it slightly so that it can touch the limit pressure bar when the rod is horizontal. Power on the controller and observe the rod's horizontal position.

The mechanical limit stop point in the closed direction is the reference point for calculating the travel angle of the rod. After adjusting the closing limit adjustment screw, power must be disconnected and the controller restarted (for controllers with a supercapacitor backup power supply, the power plug can be unplugged) to allow the controller to calculate the opening travel angle based on the new reference point. This adjustment will affect the verticality of the rod when it reaches the fully open position. Therefore, the **F-09** value should be adjusted appropriately to ensure the rod is vertical when fully open.

4.5 Barrier Direction Configuration

4.5.1 Barrier Direction Diagram

Figure 4-5 Right-oriented barrier

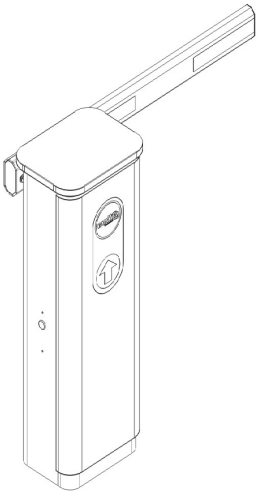

Figure 4-6 Left-oriented barrier

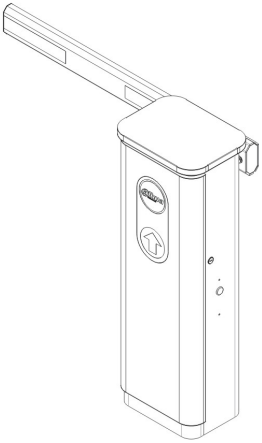

4.5.2 Changing Barrier Direction

The following steps describe the procedure to change a right-oriented straight rod barrier to a left-oriented straight rod barrier (if the rod is not installed, steps 1, 2, and 3 are not required):

Procedure

Step 1 Use an open-end wrench to remove the 2 M12 hexagon nuts that secure the pressure plate.

Step 2 Pull the pressure plate and the rod out of the clamp.

Step 3 Unplug the light strip harness connector.

Step 4 Use a hex key to remove the clamp fixing screws.

Step 5 Pull the rod and clamp out.

Step 6 Rotate the clamp 90° clockwise (counterclockwise for changing from left to right) and reposition it on the main shaft, remove the pressure plate and M12 screws, rotate the rod 180° (with the LED strip facing the other side and the LED strip harness passing through the opposite hole), and then reattach the pressure plate and M12 screws.

Step 7 Reinstall in the reverse order of steps 4, 3, 2, and 1.

Step 8 In the advanced menu of the controller, select **H-05** , and then set **2** for right-oriented machine or **3** for left-oriented machine.

Figure 4-7 Change direction of the Barrier

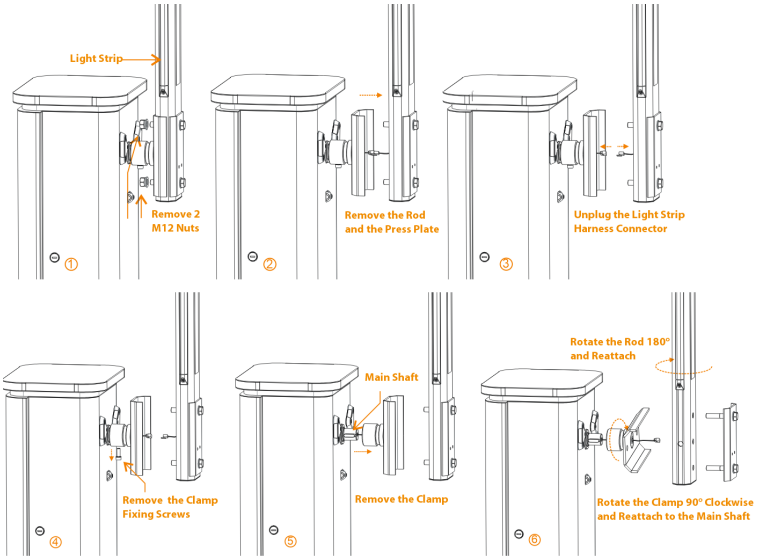

4.6 Remote Control

The external remote control receiver of this controller is a learning code type.

CAUTION

You must exit the pairing state for the remote control to function properly.

4.6.1 Adding a Remote Control

Procedure

Step 1 Press and hold the ≡ key on the LED for 2 seconds to enter the F-XX level.

Step 2 Select **F-14**, and then press the ≡ key on the LED to enter the next level interface.

Step 3 Press any key on the remote control and observe the number displayed on the LED.

If the number increases by 1, it indicates that the learning was successful.

Step 4 Press the ■ key twice to exit the pairing mode.

4.6.2 Deleting a Remote Control

Procedure

Step 1 Press and hold the ≡ key on the LED for 2 seconds to enter the F-XX level.

Step 2 Select **F-14**, and then press the ≡ key on the LED to enter the next level interface.

Step 3 After entering the menu, paired remote controls will be displayed. Press and hold ▲ and ▼ simultaneously for 3 seconds. If the number decreases to 0, it indicates a successful deletion of paired remote controls.

Step 4 Press the ■ key twice to exit the pairing mode.

5. Maintenance

Regular Maintenance

The Barrier should be maintained every 3 months. The maintenance items are as follows:

- Check for any loose or missing fasteners and tighten them promptly, such as the lock nuts on the limit adjustment screws.
- Apply lubricating oil to all moving parts to ensure good lubrication.
- Have a professional inspect the wear of vulnerable components and replace any worn parts.
- Check for any loose bolts in the transmission mechanism and listen for any unusual noises in the bearings during the raising and lowering of the Barrier.
- Inspect for any interference in the operation of the transmission parts due to loosening. If issues are found, adjust them back to the correct position.
- Check for any abnormal noises during motor operation. If any are detected, contact our after-sales service hotline or the regional responsible personnel for timely handling.
- Check for loose connections and ensure reliable grounding.

Maintenance Methods

- When power is off, turn off the power supply first, and then adjust the barrier arm to a vertical position.
- If the lock nut on the limit adjustment screw is loose, use an open-end wrench to retighten it.
- After power is off, wait for the controller indicator light to turn off, and then switch off the electronic clutch. Manually push and pull the rod to check for any looseness or slippage in the rod clamp. If any are found, use a hex wrench to retighten the clamp screws.
- With the power off, gently tug on the wire connections at the screw terminals. If any are loose, tighten them immediately.

6. Troubleshooting

Error Code

When the controller detects an anomaly, it will display an error code to indicate the type of error. The specific codes are as follows:

Table 6-1 Troubleshooting of error code

Error Code	Cause
IdLE	Motor sensor plug not connected or motor sensor fault, possibly due to loose wiring.
Er.ob	Obstacle detected during operation, causing the Barrier to rebound or stop.
Er.2	Operation timeout. Opening or closing the Barrier takes more than 30 seconds. Check if the limit pressure rod is missing.
Er.3	The Barrier encounters obstacles and stops more than 3 times in a row. Check for any obstructions.
Er.11	Current detection fault. Replace the main board.
Er.13	Excessive brake voltage. If the issue persists after a power cycle, replace the main board.
Er.17	Manual lifting of the Barrier is detected.
Er.24	Memory 1 fault. Replace the main board.
Er.25	Memory 2 fault. Unable to save logs.
uLxx	xx represents the voltage at the voltage interface. If xx is less than 15 or greater than 30, it indicates a voltage anomaly.
Er.L0	Power-on detection of a wired stop signal input. Check by removing the wired terminal to determine if the issue is caused by external devices.
Er.L1	Power-on detection of a wired close signal input. Check by removing the wired terminal to determine if the issue is caused by external devices.
Er.L2	Power-on detection of a wired open signal input. Check by removing the wired terminal to determine if the issue is caused by external devices.
Er.L3	Power-on detection of a loop detector signal input. Check by removing the wired terminal to determine if the issue is caused by external devices.
Er.L4	Power-on detection of a photoelectric signal input. Check by removing the wired terminal to determine if the issue is caused by external devices.
Er.L6	Power-on detection of a close signal input by remote control. Check by removing the remote control receiver.
Er.L7	Power-on detection of an open signal input by remote control. Check by removing the remote control receiver.

Common Faults

Table 6-2 Troubleshooting of common faults

No.	Fault	Solution
1	Power on, press the open or close button on the remote control, but the Barrier does not move.	• Check if the power indicator light on the controller is on. If not, check if the fuse is intact. • Check if the remote control is matched or if the battery is low. • Check for nearby frequency interference. Press the control buttons on the control board to see if they function normally. • Check if the external protection circuit has failed or is in protection mode. Check if the radar and loop detector indicator lights are on.
2	First barrier closure after power-on is too fast.	Check if the **F-13** power-on self-learning speed is too fast. Reduce the 2-XX value of F-13.
3	The controller displays IDLE.	• Check if the motor sensor plug is not connected. Connect the plug. • Check if the motor sensor is faulty. Replace the sensor component at the bottom of the motor.
4	The controller resets during operation.	• Measure the 24V output of the power supply with a multimeter during operation to ensure it is normal. • Check if the barrier controller is faulty. Replace the controller.

No.	Fault	Solution
5	Automatic rebound during closure.	• Check if the rod is not installed or if the short rod's lowering speed is too slow. Increase the value of **F-01** or decrease the value of **F-03**. • Check if the loop detector or radar is sending false signals; check if the loop detector or radar signal indicator lights are flashing incorrectly.
6	Significant shaking when fully open.	• Check if the opening speed is too high. Decrease the value of **F-06**. • Check if the lifting deceleration angle is too large. Decrease the values of **F-06** and **F-02** simultaneously. • Check if the lifting speed is too fast. Decrease the value of **F-00**.
7	Significant shaking when fully closed.	• Check if the closing speed is too high. Decrease the value of **F-07**. • Check if the closing deceleration angle is too small. Decrease the value of **F-07** and increase the value of **F-03** simultaneously. • Check if the closing speed is too fast. Decrease the value of **F-01**.
8	Short remote control range.	• Check if the battery voltage of the remote control is low. Replace the battery. • Check if there is severe high-voltage wiring or electromagnetic interference near the Barrier. Use a high-power remote control.
9	Remote control learning failure.	Check if the remote control is not matched with the receiver. Contact the manufacturer or confirm if it is an original remote control.
10	The barrier rod is not vertical when fully open.	Check if the vertical position value of the barrier controller is set correctly. Adjust the value of **F-09**.
11	The barrier rod is not horizontal when fully closed.	Check if the position of the closing limit adjustment screw and the limit pressure rod is unreasonable or if the horizontal position value is set incorrectly. Adjust the position of the closing limit adjustment screw and the limit pressure rod, then adjust the value of **F-08**.

Appendix1. Dimensions

Appendix Figure 1-1 Casing dimensions (mm[inch])

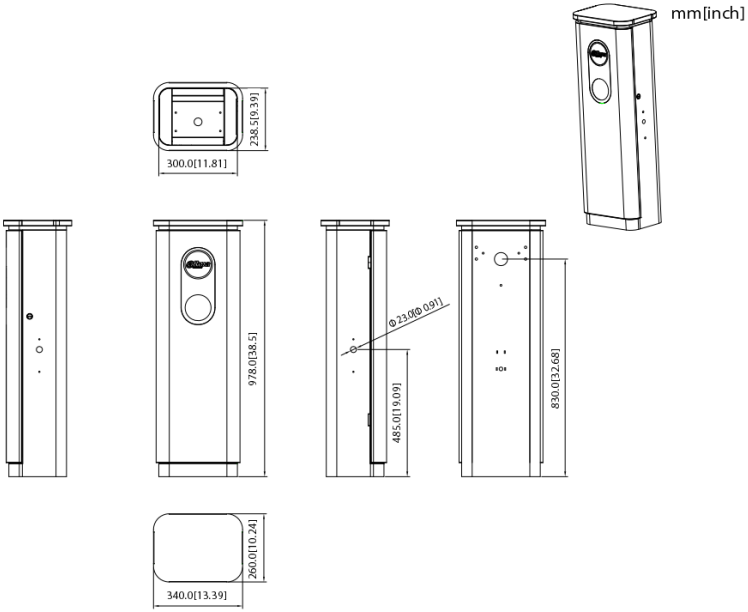

Appendix Figure 1-2 Dimensions of telescopic straight arm barrier (1) (mm[inch])

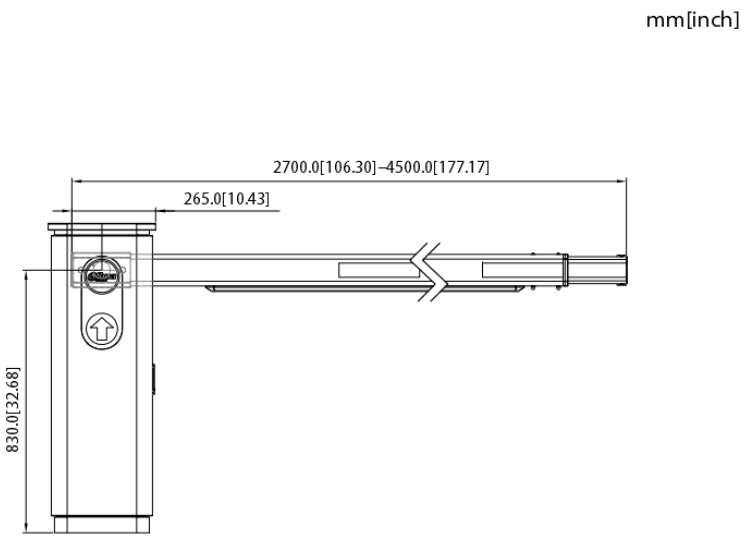

Appendix Figure 1-3 Dimensions of telescopic straight arm barrier (2) (mm[inch])

mm[inch]

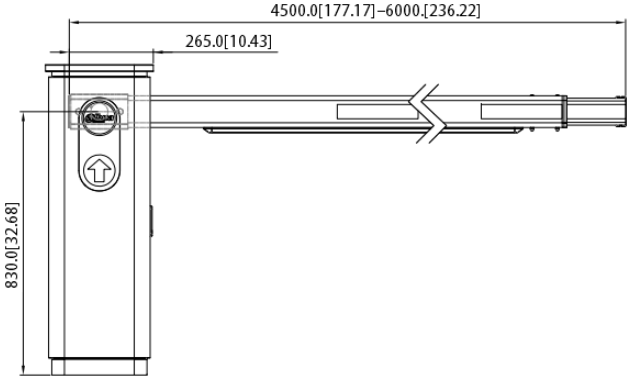

Appendix Figure 1-4 Dimensions of folding arm barrier (mm[inch])

mm[inch]

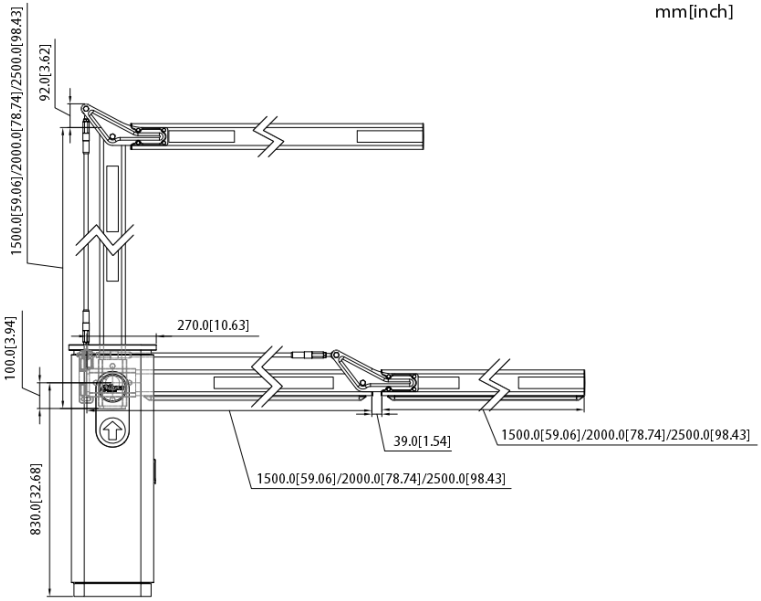

Appendix Figure 1-5 Dimensions of cylindrical arm barrier (mm[inch])
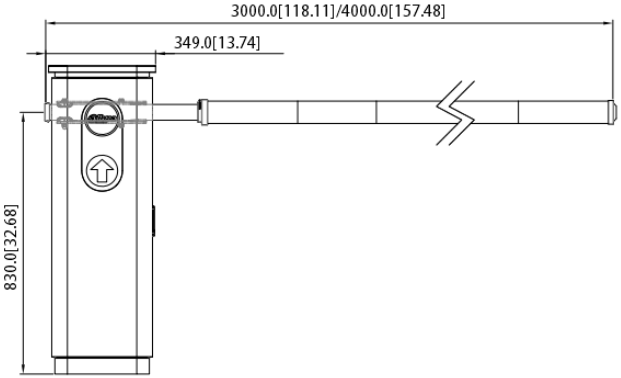
mm[inch]